New Mexico Instructional Scope

7th Grade Ratios and Proportional Relationships Guide

The purpose of this tool is to help educators understand each of the grade level standards and how those standards connect to the students' overall preparation for college and career readiness.

The NMIS is a teacher-influenced tool, designed to provide instructional planning support at the programmatic level for districts and instructional level for teachers. Its foundation stems from the vision and mission of the PED and came into existence to assure that students in NM will be engaged in a culturally and linguistically responsive educational system that meets the social, emotional, and academic needs of ALL students. This is also rooted in the belief that all students must have access to on-grade-level standards, focusing on acceleration. The purpose of this tool is to help educators understand each of the grade level standards and how those standards connect to the students' overall preparation for college and career readiness.

Standards are defined as the most critical prerequisite skills and knowledge. This document is color-coded to reflect both anchor and priority standards. Though previous emphasis was placed on priority standards to address lost learning due to COVID-19, New Mexico teachers should note that moving forward, while priority standards allow for acceleration of learning, all standards should be addressed in instruction throughout the school year.

In this guide you will find:

- A breakdown of each of the grade level standards within the cluster, including:
    - Standards of Mathematical Practice
    - Common Misconceptions
    - Identification of Priority Standards, as identified by NMPED.
    - Level of Rigor Identification
- Sample aligned assessment items
- Suggested Student Discourse Guide
- A multilayered system of supports (MLSS) and culturally and linguistically responsive instruction (CLR) guide

New Mexico Instructional Scope

7th Grade Ratios and Proportional Relationships Guide

Key		
	Priority Standard	Priority standards, as identified by NMPED, are denoted with red highlighting. Priority standards are the most critical prerequisite skills and knowledge a student needs. This does not mean that these are only standards required to be taught, just these are the standards that will allow for the acceleration the students of New Mexico need during this time.
	*Conceptual Understanding*	Conceptual Understanding standards help students build a deep understanding of the **how** and **why** of mathematics.
	*Application*	Application standards help students identify the appropriate concepts and skills to tackle **novel real-world problems.**
	*Procedural Skill and Fluency*	Procedural standards help students develop **efficiency** and **accuracy** in computations.

Standards Breakdown

- Analyze proportional relationships and use them to solve real-world and mathematical problems
  - 7.RP.A.1
  - 7.RP.A.2
  - 7.RP.A.3

Grade	*CCSS Domain*	*CCSS Cluster*
7	**Ratios and Proportional Relationships**	**Analyze proportional relationships and use them to solve real-world and mathematical problems.**

Cluster Standard: 7.RP.A.1

Standard	Standards for Mathematical Practice
Compute unit rates associated with ratios of fractions, including ratios of lengths, areas and other quantities measured in like or different units. For example, if a person walks 1/2 mile in each 1/4 hour, compute the unit rate as the complex fraction 1/2/1/4 miles per hour, equivalently 2 miles per hour.	• **SMP 1:** Make sense of problems and persevere in solving them. • **SMP 6:** Attend to precision.
Clarification Statement	**Students Who Demonstrate Understanding Can...**
• Students will continue their work with ratios to analyze proportions and proportional relationships.	• Discover that the structure of computing unit rates with whole numbers is the same concept as unit rates with ratios of fractions. • Compute unit rates in real world problems that involve complex fractions. • In writing, explain the errors that can be made when computing unit rates with complex fractions.
DOK	**Blooms**
1-2	Understand, Apply

Grade	*CCSS Domain*	*CCSS Cluster*
7	**Ratios and Proportional Relationships**	**Analyze proportional relationships and use them to solve real-world and mathematical problems.**

Cluster Standard: 7.RP.A.2

Standard	Standards for Mathematical Practice
7.RP.A.2: Recognize and represent proportional relationships between quantities. • 7.RP.A.2.A: Decide whether two quantities are in a proportional relationship, e.g., by testing for equivalent ratios in a table or graphing on a coordinate plane and observing whether the graph is a straight line through the origin. • 7.RP.A.2.B: Identify the constant of proportionality (unit rate) in tables, graphs, equations, diagrams, and verbal descriptions of proportional relationships. • 7.RP.A.2.C: Represent proportional relationships by equations. For example, if total cost t is proportional to the number n of items purchased at a constant price p, the relationship between the total cost and the number of items can be expressed as t = pn. • 7.RP.A.2.D: Explain what a point (x, y) on the graph of a proportional relationship means in terms of the situation, with special attention to the points (0, 0) and (1, r) where r is the unit rate.	• **SMP 5:** Use appropriate tools strategically. • **SMP 7:** Look for and make use of structure.
Clarification Statement	**Students Who Demonstrate Understanding Can...**
• Students expand their knowledge of unit rates to include computations with complex fractions. They recognize and represent proportional relationships in equations, in tables, and on graphs.	• Sort real-world examples from non-examples. • Create their own examples to demonstrate they understand the concept of proportional relationships. • Communicate (orally/writing) that a proportion is a statement of two equivalent ratios. • Model proportional relationships- concrete, visual, abstract (verbal [sentence], table, graph,

	equation). • Prove or disprove proportional relationships between two points. • Determine appropriate representation of a proportional relationship. • Fluently assess and solve problems from various representations. • Model proportional relationships in several different ways. • Translate a proportional relationship from verbal, table, graph, equation. • Determine the unit rate from verbal, tables, graphs, equations, diagrams. • Connect that the unit rate is the pattern or numerical coefficient (k or m) of the equation y=kx + b or y = mx + b. • Model proportional relationships in equation form. • Justify in writing the reasoning used to create an equation. • Explain the meaning of a point on a graph in context. • Discover that graphed proportional relationships are straight lines.
DOK	**Blooms**
1-2	Understand, Apply

New Mexico Instructional Scope

7th Grade Ratios and Proportional Relationships Guide

Grade	*CCSS Domain*	*CCSS Cluster*
7	**Ratios and Proportional Relationships**	**Analyze proportional relationships and use them to solve real-world and mathematical problems.**

Cluster Standard: 7.RP.A.3

Standard	Standards for Mathematical Practice
Use proportional relationships to solve multistep ratio and percent problems. Examples: simple interest, tax, markups and markdowns, gratuities and commissions, fees, percent increase and decrease, percent error.	• **SMP 3:** Construct viable arguments and critique the reasoning of others. • **SMP 8:** Look for and express regularity in repeated reasoning.
Clarification Statement	**Students Who Demonstrate Understanding Can...**
• Students use proportional reasoning to solve multi-step ratio and percent problems involving real world scenarios (percent change, sales tax, simple interest, etc.)	• Explore and connect vocabulary terms with real world examples. • Explain how they are used in each situation. • Solve problems proportional problems using cross multiplication. • Solve percent error and percent increase/decrease problems. • Explain how formulas for percent error and increase/decrease are similar.
DOK	**Blooms**
1-2	Understand, Apply

Common Misconceptions

• Direct Versus Proportional Division: Mistakes occur when direct instead of proportional division is used. For example, if it takes 2 people 4 hours to do a certain task, students may mistakenly think that it would take 1 person 2 hours rather than 8 hours. (ASCD Source) • Common vocabulary words such as sale, discount, and tax. Student will come in with a variety of	• When using a graph and locating the unit rate, students have difficulty identifying which variable the x, or y (x,y) is the unit rate. Using an example such as 1 orange for $0.35, 1 is X and cost is Y.

background knowledge with a concept of the meaning of this vocabulary	

Student Discourse Guide	
• **Purposeful, rich classroom discourse offers students the opportunity to express their ideas, thinking, and to critique the reasoning of others in a variety of ways (writing, drawing, verbal). Purposeful implementation of classroom discourse allows students to activate funds of knowledge and to refine their mathematical understanding. When students have frequent opportunities for discourse they find various paths to solutions and reveal knowledge or misunderstandings to educators. The process also allows educators to honor students' culture, lived experiences and evolving math identities.** • **Discourse that focuses on tasks that promote reasoning and problem solving is a primary mechanism for developing conceptual understanding and meaningful learning of mathematics (Michaels, O'Connor, and Resnick, 2008)**	
Domain: **Ratios and Proportional Relationships**	Strand: **Analyze proportional relationships and use them to solve real-world and mathematical problems**
Suggested Student Discourse Questions	
• How can we assess the reasonableness of answers using estimation? • Where do we see the use of unit rates in our day to day life?	• What would be the meaning of the unit rates if the numerator and denominator are reversed (reciprocal of the unit rate)? • How would you describe the information given by the unit rate?

ASSESSMENT GUIDE

- Analyze proportional relationships and use them to solve real-world and mathematical problems

Grade	*CCSS Domain*	*CCSS Strand*
7	**Ratios and Proportional Relationships**	**Analyze proportional relationships and use them to solve real-world and mathematical problems**

Sample Task #1 (Constructed Response)

There are 200 students in the 7th grade, and 40% of them are in band.

a. How many students in the 7th grade are in band?

There are 8 students in the 7th grade who play the flute in band.

b. What percent of all students in the 7th grade play the flute in band? Show your work or explain how you know.

A chair that is normally priced at $75 is marked down to $41.25. What is the percent of the discount?

Ⓐ 34%
Ⓑ 45%
Ⓒ 55%
Ⓓ 82%

ıd 8th grade in band. The 7th grade students band.

: in band? Show your work or explain how

MLSS AND CLR GUIDE

- Analyze proportional relationships and use them to solve real-world and mathematical problems

CCSS Domain	*CCSS Cluster*
Ratios and Proportional Relationships	**Analyze proportional relationships and use them to solve real-world and mathematical problems**

Culturally and Linguistically Responsive Instruction

Relevance to Families and Communities	During a unit focused on how to analyze proportional relationships and use them to solve real-world and mathematical problems, consider options for learning from your families and communities the cultural and linguistic ways this mathematics exists outside of school to create stronger home to school connections for students, for example, by having students examine proportional relationships in different recipes. Having students make their favorite recipe that requires them to double or triple the ingredients based on the number of servings the recipe yields vs. the number of servings needed.	
Cross-Curricular Connections	Science: Evaluate design solutions for maintaining biodiversity and probability of surviving and reproducing in a specific environment.	
Validate/Affirm/Build /Bridge	• *How can you design your mathematics classroom to intentionally and purposefully legitimize the home culture and languages of students and reverse the negative stereotypes regarding the mathematical abilities of students of marginalized cultures and languages?* • *How can you create connections between the cultural and linguistic behaviors of your students' home culture and language, the culture and language of school mathematics to support students in*	• Building Procedural Fluency from Conceptual Understanding: Instruction should build from conceptual understanding to allow students opportunities to make meaning of mathematics before focusing on procedures. When new learning begins with procedures it privileges those with strong prior familiarity with school mathematics procedures for solving problems and does not allow learning to build for more methods for solving tasks that occur outside of school mathematics. For example, when studying how to analyze proportional relationships and use them to solve real-world and mathematical problems the types of mathematical tasks are critical because students come to our classrooms with *Informal Knowledge/Funds of Knowledge*.

	creating mathematical identities as capable mathematicians that can use mathematics within school and society?	

Planning for Multi-Layered System of Supports

Vertical Alignment

Previous Learning	***Current Learning***	***Future Learning***
• This cluster connects student learning from 6th grade with ratios. Students learned to understand, represent, compare, and reason with ratios. These skills will be necessary as students analyze proportional relationships.	• Students connect their understanding of rational numbers to solve for unit rates, proportional reasoning and percent problems throughout grade 7.	• Students will continue to connect their understanding of units as a way to understand problems and find the solution in a multi-step problem. Students choose and interpret units consistently in formulas, choose and interpret the scale and origin in graphs and data displays.

Suggested Instructional Strategies

Pre-Teach

Level of Intensity	***Essential Question***	***Examples***
Targeted	*What pre-teaching will prepare students to productively struggle with the mathematics for this cluster within your HQIM?*	In Grade 6, students learned to reason about ratios by using equivalent ratios, tables of equivalent ratios, bar diagrams, and double-number-line diagrams. . They also were introduced to a special type of ratio called a rate. Provide opportunities to review terms, and methods for solving fraction division.
Intensive	*What critical understandings will prepare students to access the mathematics for this cluster?*	6.RP.A.2 This standard provides a foundation for work with analyzing proportional relationships and using them to solve real-world and mathematical problems because teachers can help students develop the concept of unit rates. Its purpose is to help students see that when you have a context that can be modeled with a ratio and associated unit rate, there is almost always another ratio with its associated unit rate (the only exception is when

		one of the quantities is zero), and to encourage students to flexibly choose either unit rate depending on the question at hand. If students have unfinished learning within this standard, based on assessment data, consider ways to provide intensive pre-teaching support prior to the start of the unit to ensure students are ready to access grade level instruction and assignments.
Universal Support Framework		
A student should know/understand...	A student should be able to do...	***Potential Scaffolds***

• A complex fraction is a fraction where the numerator, denominator, or both contain a fraction and can be simplified by dividing the numerator by the denominator.
• In an equation that represents a proportional relationship, the coefficient represents the same quantity as the unit rate, as well as the constant of proportionality.
• The graph of a proportional relationship is a line that passes through the origin.
• The meaning of the percent of increase/decrease.
	• Simplify complex fractions, including calculating unit rates from a given complex fraction or ratio with unlike units.
	• Write equations from context and identify the coefficient as the unit rate (which is also the constant of proportionality.)
	• Graph relationships to determine if two quantities are a proportional relationship and interpret the ordered pairs.
	• Determine the percent change from one quantity to another, as well as identify that change as an increase or a decrease.
		• Build on students' experience with the following skills:
		  ○ Understand, represent, compare and reason with ratios.
		
		• Cognitive Strategies
		  ○ Repeatedly model the strategies
		  ○ Monitor the students' use of the strategies
		  ○ Provide feedback to students
		  ○ Teach self-questioning and self-monitoring strategies
		  ○ Introduce multiple means of representation for mathematical ideas
		
		• Encourage students to use alternative tools to better access the grade level content. Examples include:
		  ○ Graphic Organizer with blank ratio tables
		  ○ Multiplication Charts
		  ○ Graphic Organizer with an example of proportional graph and a non-proportional graph

Re-Teach		
Level of Intensity	***Essential Question***	***Examples***

Targeted	What formative assessment data (e.g., tasks, exit tickets, observations) will help identify content needing to be revisited during a unit?	Examine assessments for evidence of lingering misconceptions (see common misconceptions). If students exhibit one more of these misconceptions, consider addressing the misconception by re-engaging with content during a unit on analyzing proportional relationships and using them to solve real-world and mathematical problems by revisiting student thinking through a short mini-lesson because reviewing equivalent ratios and unit rates reminds students that they can find equivalent ratios using multiplication or division.
Intensive	What assessment data will help identify content needing to be revisited for intensive interventions?	Examine assessments for evidence of students still developing the underlying ideas. For example, some students may benefit from intensive extra time during and after a unit analyzing proportional relationships and using them to solve real-world and mathematical problems by offering opportunities to understand and explore different strategies because and make sure students understand the difference between rate and unit rate. Connect that unit rate is one of many representations of equivalent ratios they can find.

Extension	
Essential Question	***Examples***
What type of extension will offer additional challenges to 'broaden' your student's knowledge of the mathematics developed within your HQIM?	To extend students learning: some learners may benefit from an extension such as the application of and development of abstract thinking skills when studying analyzing proportional relationships and using them to solve real-world and mathematical problems because it advances students by challenging them to find unit rates using complex fractions and converting them to decimals.

New Mexico Instructional Scope

7th Grade Expressions and Equations Guide

The purpose of this tool is to help educators understand each of the grade level standards and how those standards connect to the students' overall preparation for college and career readiness.

The NMIS is a teacher-influenced tool, designed to provide instructional planning support at the programmatic level for districts and instructional level for teachers. Its foundation stems from the vision and mission of the PED and came into existence to assure that students in NM will be engaged in a culturally and linguistically responsive educational system that meets the social, emotional, and academic needs of ALL students. This is also rooted in the belief that all students must have access to on-grade-level standards, focusing on acceleration. The purpose of this tool is to help educators understand each of the grade level standards and how those standards connect to the students' overall preparation for college and career readiness.

Standards are defined as the most critical prerequisite skills and knowledge. This document is color-coded to reflect both anchor and priority standards. Though previous emphasis was placed on priority standards to address lost learning due to COVID-19, New Mexico teachers should note that moving forward, while priority standards allow for acceleration of learning, **all** standards should be addressed in instruction throughout the school year.

In this guide you will find:

- A breakdown of each of the grade level standards within the cluster, including:
  - Standards of Mathematical Practice
  - Common Misconceptions
  - Identification of Priority Standards, as identified by NMPED.
  - Level of Rigor Identification
- Sample aligned assessment items
- Suggested Student Discourse Guide
- A multilayered system of supports (MLSS) and culturally and linguistically responsive instruction (CLR) guide

New Mexico Instructional Scope

7th Grade Expressions and Equations Guide

Key		
	Priority Standard	Priority standards, as identified by NMPED, are denoted with red highlighting. Priority standards are the most critical prerequisite skills and knowledge a student needs. This does not mean that these are only standards required to be taught, just these are the standards that will allow for the acceleration the students of New Mexico need during this time.
	Conceptual Understanding	Conceptual Understanding standards help students build a deep understanding of the **how** and **why** of mathematics.
	Application	Application standards help students identify the appropriate concepts and skills to tackle **novel real-world problems.**
	Procedural Skill and Fluency	Procedural standards help students develop **efficiency** and **accuracy** in computations.

Standards Breakdown

- Use properties of operations to generate equivalent expressions
  - 7.EE.A.1
  - 7.EE.A.2
- Solve real-life and mathematical problems using numerical and algebraic expressions and equations.
  - 7.EE.B.3
  - 7.EE.B.4

Grade	*CCSS Domain*	*CCSS Cluster*
7	**EXPRESSIONS & EQUATIONS**	**Use properties of operations to generate equivalent expressions**

Cluster Standard: 7.EE.A.1

Standard	Standards for Mathematical Practice
Apply properties of operations as strategies to add, subtract, factor, and expand linear expressions with rational coefficients.	• **SMP 2:** Reason abstractly and quantitatively. • **SMP 6**: Attend to precision.
Clarification Statement	**Students Who Demonstrate Understanding Can...**
• Students apply properties of operations to add, subtract, factor and expand linear equations with rational coefficients. Students then become able to rewrite expressions in different forms to solve a multi-step problem, explain the quantities and graph a solution.	• Identify properties of operations (Associative, Commutative, and Distributive). • Use properties of operations to create equivalent expressions. • Write expressions in standard or expanded form.
DOK	**Blooms**
1-2	Remember, Understand

Grade	*CCSS Domain*	*CCSS Cluster*
7	**EXPRESSIONS & EQUATIONS**	**Use properties of operations to generate equivalent expressions.**

Cluster Standard: 7.EE.A.2

Standard	Standards for Mathematical Practice
Understand that rewriting an expression in different forms in a problem context can shed light on the problem and how the quantities in it are related. For example, a + 0.05a = 1.05a means that "increase by 5%" is the same as "multiply by 1.05."	● **SMP 5:** Use appropriate tools strategically. ● **SMP 7:** Look for and make use of structure.
Clarification Statement	**Students Who Demonstrate Understanding Can...**
Students apply properties of operations to add, subtract, factor and expand linear equations with rational coefficients. Students then become able to rewrite expressions in different forms to solve a multi-step problem, explain the quantities and graph a solution.	● Use properties to create equivalent expressions. ● Rewrite an expression in different forms. ● Demonstrate how quantities in an equation are related. ● Apply and extend previous understanding of operations with fractions to add, subtract, multiply, and divide. ● Solve real-life and mathematical problems
DOK	**Blooms**
1-2	Remember, Understand

Common Misconceptions

- When an expression has several steps, sometimes students forget to follow the order of operation.

Grade	*CCSS Domain*	*CCSS Cluster*
7	**EXPRESSIONS & EQUATIONS**	**Solve real-life and mathematical problems using numerical and algebraic expressions and equations.**

Cluster Standard: 7.EE.B.3

Standard	Standards for Mathematical Practice
Solve multi-step real life and mathematical problems posed with positive and negative rational numbers in any form (whole numbers, fractions, and decimals), using tools strategically. Apply properties of operations to calculate with numbers in any form; convert between forms as appropriate; and assess the reasonableness of answers using mental computation and estimation strategies. For example: If a woman making $25 an hour gets a 10% raise, she will make an additional 1 /10 of her salary an hour, or $2.50, for a new salary of $27.50. If you want to place a towel bar 9 3 /4 inches long in the center of a door that is 27 1 /2 inches wide, you will need to place the bar about 9 inches from each edge; this estimate can be used as a check on the exact computation.	• **SMP 5**: Use appropriate tools strategically. • **SMP 8:** Look for and express regularity in repeated reasoning.
Clarification Statement	**Students Who Demonstrate Understanding Can...**
• Students apply properties of operations to add, subtract, factor and expand linear equations with rational coefficients. Students then become able to rewrite expressions in different forms to solve a multi-step problem, explain the quantities and graph a solution	• Solve multi-step real life and mathematical problems that include positive and negative rational numbers. • Convert between fractions, decimals, and percentages. • Use properties of operations as needed to solve the problems. • Justify the reasonableness of their answers using estimation
DOK	**Blooms**
2	Remember, Understand

Grade	*CCSS Domain*	*CCSS Cluster*
7	**EXPRESSIONS & EQUATIONS**	**Solve real-life and mathematical problems using numerical and algebraic expressions and equations**

Cluster Standard: 7.EE.B.4

Standard	Standards for Mathematical Practice
Use variables to represent quantities in a real world or mathematical problem and construct simple equations and inequalities to solve problems by reasoning about the quantities. A: Solve word problems leading to equations of the form $px + q = r$ and $p(x + q) = r$, where p, q, and r are specific rational numbers. Solve equations of these forms fluently. Compare an algebraic solution to an arithmetic solution, identifying the sequence of the operations used in each approach. For example, the perimeter of a rectangle is 54 cm. Its length is 6 cm. What is its width? B: Solve word problems leading to inequalities of the form $px + q > r$ or $px + q < r$, where p, q, and r are specific rational numbers. Graph the solution set of the inequality and interpret it in the context of the problem. For example: As a salesperson, you are paid $50 per week plus $3 per sale. This week you want your pay to be at least $100. Write an inequality for the number of sales you need to make and describe the solutions	• **SMP 1:** Make sense of problems and persevere in solving them. • **SMP 3:** Construct viable arguments and critique the reasoning of others.

Clarification Statement	Students Who Demonstrate Understanding Can...
• Students apply properties of operations to add, subtract, factor and expand linear equations with rational coefficients. Students then become able to rewrite expressions in different forms to solve a multi-step problem, explain the quantities and graph a solution.	• Write equations in the appropriate form. • Solve and graph inequalities • Apply the inequality and the solution in the context of the problem

DOK	Blooms
1-2	Remember, Understand

Common Misconceptions

- Students may have difficulty with representing numbers in different forms such as moving from a percentage to a fraction.
- Students may need to support scaffolding multi-step problems that require steps that build upon each other.

Student Discourse Guide

- **Purposeful, rich classroom discourse offers students the opportunity to express their ideas, thinking, and to critique the reasoning of others in a variety of ways (writing, drawing, verbal). Purposeful implementation of classroom discourse allows students to activate funds of knowledge and to refine their mathematical understanding. When students have frequent opportunities for discourse they find various paths to solutions and reveal knowledge or misunderstandings to educators. The process also allows educators to honor students' culture, lived experiences and evolving math identities.**
- **Discourse that focuses on tasks that promote reasoning and problem solving is a primary mechanism for developing conceptual understanding and meaningful learning of mathematics (Michaels, O'Connor, and Resnick, 2008)**

Domain: **Expressions and Equations**	Strand: **Use properties of operations to generate equivalent expressions**
Suggested Student Discourse Questions	
• How can I justify that multiple representations in the context of a problem are equivalent expressions? • How do I assess the reasonableness of my answer?	• Describe how to write equivalent expressions for a real world situation • How can I use the properties of equality to express an equation in a different but equivalent way?

Domain: **Expressions and Equations**	Strand: **Solve real-life and mathematical problems using numerical and algebraic expressions and equations**
Suggested Student Discourse Questions	
• How can I formulate and use different strategies to solve one and two-step equations? • Would the two-step equation yield the same solution if you reverse the order of the operations when solving it?	• How do we use variables to represent unknown quantities in mathematical problems to construct and solve simple inequalities? • How should we deal with negative coefficients, when solving inequalities?

ASSESSMENT GUIDE

- Use properties of operations to generate equivalent expressions.
- Solve real-life and mathematical problems using numerical and algebraic expressions and equations.

Grade	*CCSS Domain*	*CCSS Strand*
7	**EXPRESSIONS & EQUATIONS**	**Use properties of operations to generate equivalent expressions**

Sample Task #1 (Constructed Response)

What number would you multiply $(6x-y+4)$ by so that the result is an equivalent expression to $(3x+9x)-(2y-8)$?

Sample Task #2 (Multiple Choice)

A tire store has a sale: buy 3 tires, get a 4th tire for free. The cost of one tire is x dollars.

Which of these expressions could be used to find the average cost per tire during this sale? Select **all** that apply.

Ⓐ $\frac{x+x+x+0}{4}$

Ⓑ $\frac{x+x+x}{3}$

Ⓒ $x-0.25x$

Ⓓ $x-\frac{3}{4}$

Ⓔ $0.75x$

Ⓕ $0.25x$

Grade	*CCSS Domain*	*CCSS Strand*
7	**EXPRESSIONS & EQUATIONS**	**Solve real-life and mathematical problems using numerical and algebraic expressions and equations**

Sample Task #1 (Constructed Response)

. Brian received a $60 gift card for an art store. He used his gift card to buy canvases and tubes of paint.

- Brian bought 5 tubes of paint for $6.25 each.
- He bought 2 canvases for $26.00 each.
- Brian used a coupon for 20% off his entire purchase.
- After the coupon was used, the store added 5% sales tax.

a. After using his entire gift card, how much money did Brian still need to pay? Show your work or explain how you know.

b. Brian realized that he did not have any extra money, but he still needs to buy the 2 canvases. If Brian could pay using only the gift card, what is the maximum number of tubes of paint he could buy? Show your work or explain how you know.

Sample Task #2 (Multiple Choice)

. Erica goes to a carnival.

- The admission cost is $5.
- Each game ticket costs $0.50.
- Erica can spend no more than $20 at the carnival.

Which inequality can be used to find the number of game tickets, t, Erica can buy?

Ⓐ $0.50t+5\geq 20$

Ⓑ $5+0.50t\leq 20$

Ⓒ $20-0.50t\leq 5$

Ⓓ $0.50t-20\geq 5$

MLSS AND CLR GUIDE

- Use properties of operations to generate equivalent expressions.
- Solve real-life and mathematical problems using numerical and algebraic expressions and equations.

CCSS Domain	*CCSS Cluster*
Expressions and Equations	**Use properties of operations to generate equivalent expressions**

Culturally and Linguistically Responsive Instruction

Relevance to Families and Communities	During a unit focused on using properties of operations to generate equivalent expressions , consider options for learning from your families and communities the cultural and linguistic ways this mathematics exists outside of school to create stronger home to school connections for students, for example, writing expressions that represent situations your family and community might experience. Students should make sure they know what the real world meaning each part of the expression represents (term, operation, variable, etc.) Then students can create an equivalent expression and discuss what the new parts of the expression mean in reference to your family or community and the original expression.	
Cross-Curricular Connections	**Science:** Students can write number sentences for conservation of energy of a system.	
Validate/Affirm/Build/Bridge	• *How can you design your mathematics classroom to intentionally and purposefully legitimize the home culture and languages of students and reverse the negative stereotypes regarding the mathematical abilities of students of marginalized cultures and languages?* • *How can you create connections between the cultural and linguistic behaviors of your students' home culture*	• Eliciting and Using Evidence of Student Thinking: Eliciting and using student thinking can promote a classroom culture in which mistakes or errors are viewed as opportunities for learning. When student thinking is at the center of classroom activity, "it is more likely that students who have felt evaluated or judged in their past mathematical experiences will make meaningful contributions to the classroom over time." For example, when studying, using properties of operations to generate equivalent expressions eliciting and using student thinking is critical because when generating equivalent expressions students will be applying different strategies and skills such as factoring, expanding and combining like terms. Students may not feel that they have the academic vocabulary to explain their thought process, but they can show their work through acting it out or

	and language, the culture and language of school mathematics to support students in creating mathematical identities as capable mathematicians that can use mathematics within school and society?	simplifying the expressions which will provide evidence of their thinking.

Planning for Multi-Layered System of Supports

Vertical Alignment

Previous Learning	***Current Learning***	***Future Learning***
• In 6th grade, learners extend their knowledge of creating equivalent expressions to include situations in which a knowledge of the rules of integers are needed. In 6th grade, learners extend their understanding of repeated addition as multiplication (representing 3 + 3 + 3 + 3 as 4 x 3), to simplify variable expressions (j+ j+ j+ j) written as 4j. • In 6th grade, using order of operations, learners broaden their work solving equations and inequalities to include those with more than one step, as well as those with negative coefficients.	• In 7th grade, learners will develop an understanding of operations with rational numbers when working with expressions and linear equations. In 7th grade, learners will apply knowledge of working with expressions and equations to solve problems involving scale drawings and informal geometric constructions, and work with two- and three-dimensional shapes to solve problems involving area, surface area, and volume. In 7th grade, learners will use vertical angles, adjacent angles, angles on a line, and angles at a point in a multi-step problem to write and solve equations for an unknown angle in a figure.	• In 8th grade, learners will solve linear equations in one variable. Give examples of linear equations in one variable with one solution, infinitely many solutions, or no solutions. Solve linear equations with rational number coefficients, including equations whose solutions require expanding expressions using the distributive property and collecting like terms In 8th grade, learners will use the equation of a linear model to solve problems in the context of bivariate measurement data, interpreting the slope and intercept.

Suggested Instructional Strategies

Pre-Teach

Level of Intensity	***Essential Question***	***Examples***
Targeted	*What pre-teaching will*	• In grade 6, students learned to read and

	prepare students to productively struggle with the mathematics for this cluster within your HQIM?	interpret parts of an expression by using mathematical terms and viewing expressions as single entities. Review definition of expression contrasted to equations. Identify parts of an expression. Review and practice Order of Operations ● For example, some learners may benefit from targeted pre-teaching that rehearses new mathematical language when studying writing, reading, evaluating algebraic expressions and identifying/generating equivalent expressions because this cluster requires the acquisition of a considerable amount of new vocabulary. The terms that are used to identify the parts and types of expressions will support students in becoming proficient in explaining and discussing many new concepts encompassed in expressions, equations, and inequalities. This is the first experience students have with things such as variables, coefficients, constants, and they will also be learning how to extend previous learning of exponents, order of operations, sums, differences products, quotients, equivalent, like and unlike terms, etc.
Intensive	*What critical understandings will prepare students to access the mathematics for this cluster?*	*3.OA.B.5: This standard provides a foundation for work with using properties of operations to generate equivalent expressions because this standard lays the foundation for using properties as strategies to multiply and divide. At this level students do not have to know the name of the properties, but they are using them to develop commutative and associative properties of multiplication with whole numbers. If students have unfinished learning within this standard, based on assessment data, consider ways to provide intensive pre-teaching support prior to the start of the unit to ensure students are ready to access grade level instruction and assignments.*

Universal Support Framework		
A student should know/understand...	A student should be able to do...	***Potential Scaffolds***
● The properties of operations	● Use conventions about the order of	● Build on students' experience with the following skills:

(commutative, associative, identity, distributive) can be expanded to include rational numbers (fractions, negative integers). ● There can be more than one expression equivalent to a given expression	operations and properties of operations to create equivalent expressions, including adding, subtracting, factoring, and expanding linear expressions. ● Combine like terms with rational coefficients. ● Recognize and explain the meaning of a given expression and its component parts in terms of a context.	○ Create equivalent expressions using integer rules. ○ Understand repeated addition as multiplication ○ Use order of operations to solve equations and inequalities involving more than one step. ○ Use order of operations to solve equations and inequalities involving negative coefficients. ○ ● Cognitive Strategies ○ Repeatedly model the strategies ○ Monitor the students' use of the strategies ○ Provide feedback to students ○ Teach self-questioning and self-monitoring strategies ○ Introduce multiple means of representation for mathematical ideas ● Encourage students to use alternative tools to better access the grade level content. Examples include: ○ Graphic Organizer with Number Properties ○ Colored Pencil

Re-Teach		
Level of Intensity	***Essential Question***	***Examples***
Targeted	What formative assessment data (e.g., tasks, exit tickets, observations) will help identify content needing to be revisited during a unit?	For example, students may benefit from re-engaging with content during a unit on using properties of operations to generate equivalent expressions by clarifying mathematical ideas and/or concepts through a short mini lesson because combining like terms, factoring and expanding linear equations are examples of using properties of operations. Having an explicit mini lesson on the distributive property as a method for expanding linear equations will support students in understanding the connection between the properties and generative equivalent expressions.

Intensive	What assessment data will help identify content needing to be revisited for intensive interventions?	For example, some students may benefit from intensive extra time during and after a unit using properties of operations to generate equivalent expressions by helping students move from specific answers to generalizations for certain types of problems because properties of operations are generalized statements to help students understand the structure and pattern of expressions. Taking time to allow students to make the generalization from specific examples will help students deepen their understanding of using the properties to generate equivalent expressions.

Extension	
Essential Question	***Examples***
What type of extension will offer additional challenges to 'broaden' your student's knowledge of the mathematics developed within your HQIM?	For example, some learners may benefit from an extension such as open-ended tasks linking multiple disciplines when studying using properties of operations to generate equivalent expressions because the properties of operations are applied to find structure and patterns for students in math. Other disciplines have their own concepts that support students when applied. Understanding the concept of going from generalizations to specific examples and then from specific examples to generalizations can help students deepen their understanding of the need for properties. For example, the classification system in Science.

CCSS Domain	*CCSS Cluster*
Expressions and Equations	**Solve real-life and mathematical problems using numerical and algebraic expressions and equations**

Culturally and Linguistically Responsive Instruction

Relevance to Families and Communities	During a unit focused on solving real life and mathematical problems using numerical and algebraic expressions and equations, consider options for learning from your families and communities the cultural and linguistic ways this mathematics exists outside of school to create stronger home to school connections for students, for example, learning about calculating the cost of bills within a budget for a family. Students could write an expression or equation for each bill for the month. Students could even create an inequality with the amount of money set aside for bills so they could determine the

	amount of discretionary money left after paying the bills.	
Cross-Curricular Connections	**Science:** ● Collaborate with peers to define or describe an issue in society and how to evaluate solutions. ● Run tests of solutions and change designs as needed. ● Construct scientific arguments for how uneven distributions of Earth's Mineral, energy, groundwater resources are the result of past and current geoscience processes. Examples: Metal ores, volcanic activity, soil weathering, rock deposits, mining by humans.	
Validate/Affirm/Build/Bridge	● *How can you design your mathematics classroom to intentionally and purposefully legitimize the home culture and languages of students and reverse the negative stereotypes regarding the mathematical abilities of students of marginalized cultures and languages?* ● *How can you create connections between the cultural and linguistic behaviors of your students' home culture and language, the culture and language of school mathematics to support students in creating mathematical identities as capable mathematicians that can use mathematics within school and society?*	● Facilitating Meaningful Mathematical Discourse: Mathematics discourse requires intentional planning to ensure all students feel comfortable to share, consider, build upon and critique the mathematical ideas under consideration. When student ideas serve as the basis for discussion, we position them as knowers and doers of mathematics by using equitable talk moves students and attending to the ways students talk about who is and isn't capable of mathematics we can disrupt the negative images and stereotypes around mathematics of marginalized cultures and languages. "A discourse-based mathematics classroom provides stronger access for every student — those who have an immediate answer or approach to share, those who have begun to formulate a mathematical approach to a task but have not fully developed their thoughts, and those who may not have an approach but can provide feedback to others." For example, when studying to solve real life and mathematical problems using numerical and algebraic expressions and equations, facilitating meaningful mathematical discourse is critical because these real life and mathematical problems tend to have multiple entry points for students in order to solve the problem. Students should be able to enter the problem at their level 35 6 and then take the task to a higher level through connections to previous learning or to additional strategies. Allowing students to discuss the mathematical strategy they used to solve the problem provides them a voice and an opportunity to share their thinking with the group in a way that is okay to be different.

Planning for Multi-Layered System of Supports

Vertical Alignment		
Previous Learning	***Current Learning***	***Future Learning***
• In 6th grade, students use variables to represent numbers and write expressions when solving a real-world or mathematical problem with equations or expressions. This connects directly to this cluster as students build upon this skill with multiple step problems and the inclusion of rational numbers.	• In 7th grade, students will develop an understanding of operations with rational numbers when working with expressions and linear equations. They will use these skills later in 7th grade when applying these skills to scale drawings, geometric constructions, area, and volume.	• In 8th grade students solve linear equations (including rational number coefficients) in one variable with one solution, infinitely many solutions, or no solutions. In 8th grade, learners analyze and solve pairs of simultaneous linear equations (in one and two variables).

Suggested Instructional Strategies		
Pre-Teach		
Level of Intensity	***Essential Question***	***Examples***
Targeted	*What pre-teaching will prepare students to productively struggle with the mathematics for this cluster within your HQIM?*	For example, some learners may benefit from targeted pre-teaching that provides additional time for confusion to happen with new mathematical ideas when studying solving real life and mathematical problems using numerical and algebraic expressions and equations because this cluster focuses on solving two step equations/inequalities and the previous 6th grade cluster focused on one-step equations. Providing time for students to struggle and to determine how to apply their previous knowledge from one step-equations can help clear up misconceptions because students will have had time to develop their thought process instead of just going through steps.
Intensive	*What critical understandings will prepare students to access the mathematics for this cluster?*	*6.EE.B.7 This standard provides a foundation for work with solving real life and mathematical problems using numerical and algebraic expressions and equations because in this standard, students are expected to solve real world and mathematical problems in the form of $x + p = q$ and $px=q$, which are one step equations with positive rational numbers. In the 7th grade cluster, students are introduced to two step equations & inequalities with positive and negative rational numbers. If students have unfinished learning within this standard,*

		based on assessment data, consider ways to provide intensive pre-teaching support prior to the start of the unit to ensure students are ready to access grade level instruction and assignments.
Universal Support Framework		
A student should know/understand...	A student should be able to do...	***Potential Scaffolds***

• Percents can be interpreted as both fractions and decimals.
• How to check their work for reasonableness using estimation strategies.
• How to choose between forms of a rational number to simplify calculations or communicate solutions meaningfully.
• Connections between arithmetic solution processes that do not use variables and algebraic solution processes that use equations.
	• Compute (add, subtract, multiply and divide) rational numbers in various forms.
	• Extend computations of rational numbers to real-world situations (e.g. discounts, commissions, perimeter, area, etc.).
	• Create and fluently solve equations of the forms $px + q = r$ and $p(x + q) = r$.
	• Create, solve, and graph inequalities of the forms $px + q > r$, $px + q < r$, $px + q \geq r$, and $px + q \leq r$.
		• Build on students' experience with the following skills:
		  ○ Use variables to represent numbers to represent numbers.
		  ○ Write expressions when solving real world mathematical problems.
		  ○ Solve multiple step problems including rational numbers.
		
		• Cognitive Strategies
		  ○ Repeatedly model the strategies
		  ○ Monitor the students' use of the strategies
		  ○ Provide feedback to students
		  ○ Teach self-questioning and self-monitoring strategies
		  ○ Introduce multiple means of representation for mathematical ideas
		
		• Encourage students to use alternative tools to better access the grade level content. Examples include:
		  ○ Graphic organizer with grade appropriate math symbols
		  ○ Colored pencils
		  ○ Algebra tiles
		  ○ Percent- Fraction-Decimal Reference Chart

Re-Teach		
Level of Intensity	***Essential Question***	***Examples***

Targeted	What formative assessment data (e.g., tasks, exit tickets, observations) will help identify content needing to be revisited during a unit?	Examine assessments for evidence of lingering misconceptions (see common misconceptions). If students exhibit one more of these misconceptions, consider addressing the misconception by re-engaging with content during a unit on solving real life and mathematical problems using numerical and algebraic expressions and equations by examining tasks from a different perspective through a short mini lesson because students often struggle with the concept of an inequality versus an equation, even though solving both is very similar. By looking at a task through the perspective of needing one answer versus a number set students may be able to deepen their understanding of solving an equation/inequality.
Intensive	What assessment data will help identify content needing to be revisited for intensive interventions?	Examine assessments for evidence of students still developing the underlying ideas. For example, some students may benefit from intensive extra time during and after a unit solving real life and mathematical problems using numerical and algebraic expressions and equations by addressing conceptual understanding because in this cluster students are solving two-step equations/ inequalities. Students might forget to keep the equation/inequality in balance when solving. Teachers can check this by having them use algebra tiles when solving equations/inequalities.

Extension	
Essential Question	***Examples***
What type of extension will offer additional challenges to 'broaden' your student's knowledge of the mathematics developed within your HQIM?	To extend students learning about ... For example, some learners may benefit from an extension such as the opportunity to explore links between various topics when studying solving real life and mathematical problems using numerical and algebraic expressions and equations because of the link between expressions, equations and inequalities. What is similar, different, what generalizations about each can be made? What do we know about the solutions for each?

New Mexico Instructional Scope

7th Grade Geometry Guide

The purpose of this tool is to help educators understand each of the grade level standards and how those standards connect to the students' overall preparation for college and career readiness.

The NMIS is a teacher-influenced tool, designed to provide instructional planning support at the programmatic level for districts and instructional level for teachers. Its foundation stems from the vision and mission of the PED and came into existence to assure that students in NM will be engaged in a culturally and linguistically responsive educational system that meets the social, emotional, and academic needs of ALL students. This is also rooted in the belief that all students must have access to on-grade-level standards, focusing on acceleration. The purpose of this tool is to help educators understand each of the grade level standards and how those standards connect to the students' overall preparation for college and career readiness.

Standards are defined as the most critical prerequisite skills and knowledge. This document is color-coded to reflect both anchor and priority standards. Though previous emphasis was placed on priority standards to address lost learning due to COVID-19, New Mexico teachers should note that moving forward, while priority standards allow for acceleration of learning, all standards should be addressed in instruction throughout the school year.

In this guide you will find:

- A breakdown of each of the grade level standards within the cluster, including:
    - Standards of Mathematical Practice
    - Common Misconceptions
    - Identification of Priority Standards, as identified by NMPED.
    - Level of Rigor Identification
- Sample aligned assessment items
- Suggested Student Discourse Guide
- A multilayered system of supports (MLSS) and culturally and linguistically responsive instruction (CLR) guide

New Mexico Instructional Scope

7th Grade Geometry Guide

Key		
	Priority Standard	Priority standards, as identified by NMPED, are denoted with red highlighting. Priority standards are the most critical prerequisite skills and knowledge a student needs. This does not mean that these are only standards required to be taught, just these are the standards that will allow for the acceleration the students of New Mexico need during this time.
	Conceptual Understanding	Conceptual Understanding standards help students build a deep understanding of the **how** and **why** of mathematics.
	Application	Application standards help students identify the appropriate concepts and skills to tackle **novel real-world problems.**
	Procedural Skill and Fluency	Procedural standards help students develop **efficiency** and **accuracy** in computations.

Standards Breakdown

- Draw construct and describe geometrical figures and describe the relationships between them
  - 7.G.A.1
  - 7.G.A.2
  - 7.G.A.3
- Solve real-life and mathematical problems involving angle measure, area, surface area, and volume
  - 7.G.B.4
  - 7.G.B.5
  - 7.G.B.6

Grade	*CCSS Domain*	*CCSS Cluster*
7	**GEOMETRY**	**Draw construct and describe geometrical figures and describe the relationships between them**

Cluster Standard: 7.G.A.1

Standard	Standards for Mathematical Practice
Solve problems involving scale drawings of geometric figures, including computing actual lengths and areas from a scale drawing and reproducing a scale drawing at a different scale.	• **SMP 2**: Reason abstractly and quantitatively. • **SMP 4:** Model with mathematics.
Clarification Statement	**Students Who Demonstrate Understanding Can...**
• Students work to draw and construct geometric shapes, particularly triangles from given angle and side measurements. Students find relationships and connections between a 3D figure and slicing it into a plane figure. Students use scale drawings to find the actual lengths from scale drawing or redrawing a scale drawing to another scale	• Solve problems involving scale drawings. • Calculate length and area from scale drawings. • Reproduce a scale drawing at a different scale.
DOK	**Blooms**
1-2	Remember, Understand

Grade	*CCSS Domain*	*CCSS Cluster*
7	**GEOMETRY**	**Draw construct and describe geometrical figures and describe the relationships between them**

Cluster Standard: 7.G.A.2

Standard	Standards for Mathematical Practice
Draw (freehand, with ruler and protractor, and with technology) geometric shapes with given conditions. Focus on constructing triangles from three measures of angles or sides, noticing when the conditions determine a unique triangle, more than one triangle, or no triangle.	• **SMP 5:** Use appropriate tools strategically.
Clarification Statement	**Students Who Demonstrate Understanding Can...**
• Students work to draw and construct geometric shapes, particularly triangles from given angle and side measurements. Students find relationships and connections between a 3D figure and slicing it into a plane figure. Students use scale drawings to find the actual lengths from scale drawing or redrawing a scale drawing to another scale	• Draw a geometric figure with given conditions. • Explain why a set of given conditions does (or does not) produce the desired figure. • Measure side lengths and angle measures with given tools.
DOK	**Blooms**
1-2	Remember, Understand

Grade	*CCSS Domain*	*CCSS Cluster*
7	**GEOMETRY**	**Draw construct and describe geometrical figures and describe the relationships between them**

Cluster Standard: 7.G.A.3

Standard	Standards for Mathematical Practice
Describe the two-dimensional figures that result from slicing three dimensional figures, as in plane sections of right rectangular prisms and right rectangular pyramids.	• **SMP 6**: Attend to precision. • **SMP 8**: Look for and express regularity in repeated reasoning.
Clarification Statement	**Students Who Demonstrate Understanding Can...**
• Students work to draw and construct geometric shapes, particularly triangles from given angle and side measurements. Students find relationships and connections between a 3D figure and slicing it into a plane figure. Students use scale drawings to find the actual lengths from scale drawing or redrawing a scale drawing to another scale	• Identify the two-dimensional cross-sections that are formed by slicing three-dimensional figures. • Describe the resulting face shape from cuts made parallel and perpendicular to the bases of right rectangular prisms and pyramids.
DOK	**Blooms**
1-3	Understand, Apply, Analyze

Common Misconceptions

- To minimize errors, have students use graph paper to make their scale drawings. Students without a solid grasp of measurement units such as those for area, will have difficulty with this standard, as will students who need more help with proportional reasoning. Use the opportunity to measure the classroom or other hands-on measurements to reinforce measurement units for those students.

Grade	*CCSS Domain*	*CCSS Cluster*
7	**GEOMETRY**	**Solve real-life and mathematical problems involving angle measure, area, surface area, and volume**

Cluster Standard: 7.G.B.4

Standard	Standards for Mathematical Practice
Know the formulas for the area and circumference of a circle and use them to solve problems; give an informal derivation of the relationship between the circumference and area of a circle.	• **SMP 1:** Make sense of problems and persevere in solving them.
Clarification Statement	**Students Who Demonstrate Understanding Can...**
• Students work on geometric problem solving. Students use basic information such as area, surface area, and volume formulas and facts about types of angles (supplementary, complementary, vertical, and adjacent) to solve real-world problems.	• Explain the relationships between radius and diameter. • Explain that the ratio of circumference to diameter can be expressed as pi. • Apply formulas to determine area, circumference, diameter, and radius of a circle to solve real-world problems. • Solve real world problems involving circumference and area of a circle.
DOK	**Blooms**
1-2	Understand, Apply

Grade	*CCSS Domain*	*CCSS Cluster*
7	**GEOMETRY**	**Solve real-life and mathematical problems involving angle measure, area, surface area, and volume**

Cluster Standard: 7.G.B.5

Standard	**Standards for Mathematical Practice**
Use facts about supplementary, complementary, vertical, and adjacent angles in a multistep problem to write and solve simple equations for an unknown angle in a figure.	• **SMP 1:** Make sense of problems and persevere in solving them. • **SMP 4:** Model with mathematics.
Clarification Statement	**Students Who Demonstrate Understanding Can...**
• Students work on geometric problem solving. Students use basic information such as area, surface area, and volume formulas and facts about types of angles (supplementary, complementary, vertical, and adjacent) to solve real-world problems.	• Use understandings of angles (supplementary, complementary, vertical, adjacent) and deductive reasoning to write and solve equations. • Write and solve equations based on a diagram of intersecting lines with some known angle measures. • Justify angle measurements using facts about complementary, supplementary, vertical and/or adjacent angles.
DOK	**Blooms**
1-2	Understand, Apply

Grade	*CCSS Domain*	*CCSS Cluster*
7	**GEOMETRY**	**Solve real-life and mathematical problems involving angle measure, area, surface area, and volume**

Cluster Standard: 7.G.B.6

Standard	Standards for Mathematical Practice
Solve real-world and mathematical problems involving area, volume and surface area of two- and three-dimensional objects composed of triangles, quadrilaterals, polygons, cubes, and right prisms.	• **SMP 1:** Make sense of problems and persevere in solving them. • **SMP 4:** Model with mathematics.
Clarification Statement	**Students Who Demonstrate Understanding Can...**
• Students work on geometric problem solving. Students use basic information such as area, surface area, and volume formulas and facts about types of angles (supplementary, complementary, vertical, and adjacent) to solve real-world problems.	Calculate the area, volume and surface area of two-dimensional and three-dimensional objects. • Explain why the formula works and how the formula relates to the measure (area and volume) and the figure. • Solve real-world problems involving geometry concepts such as area, volume, and surface area. • Justify their solutions to problems involving area, volume, and surface area
DOK	**Blooms**
1-2	Apply

Common Misconceptions

- The formulas for the area of a circle and the circumference of a circle are often confused by students. Teaching students to memorize these formulas without any understanding of how they relate to a circle increases the chance for confusion. Build the understanding before presenting the formulas.

Student Discourse Guide

- **Purposeful, rich classroom discourse offers students the opportunity to express their ideas, thinking, and to critique the reasoning of others in a variety of ways (writing, drawing, verbal). Purposeful implementation of classroom discourse allows students to activate funds of knowledge and to refine their mathematical understanding. When students have frequent opportunities for discourse, they find various paths to solutions and reveal knowledge or misunderstandings to educators. The process also allows educators to honor students' culture, lived experiences and evolving math identities.**
- **Discourse that focuses on tasks that promote reasoning and problem solving is a primary mechanism for developing conceptual understanding and meaningful learning of mathematics (Michaels, O'Connor, and Resnick, 2008)**

Domain: **Geometry**	Strand: **Draw construct and describe geometrical figures and describe the relationships between them**
Suggested Student Discourse Questions	
• What is the relationship between the ratios of side lengths and areas of geometric figures in scale drawings? • How can we apply proportions when you draw a scale model?	• How do you apply scale drawing or similar figures in the real world? • What is the difference and similarities between scale drawing and scale factors?

Domain: **Geometry**	Strand: **Solve real-life and mathematical problems involving angle measure, area, surface area, and volume**
Suggested Student Discourse Questions	
• How do we find the circumference and area of a circle using the relationship between them? • How do you verify the formula of surface area of solid with the net of the solid?	• How do we solve real-world and mathematical problems involving areas of two-dimensional objects composed of triangles, quadrilaterals, and polygons using area and surface area?

• What are different ways to partition the given two-dimension objects (such as L-shape figure) to find the area? Verify if the strategies yield the same result.	• Explain each part of the formula of surface area and what each part represents on the net of the solid.

ASSESSMENT GUIDE

- Draw construct and describe geometrical figures and describe the relationships between them
- Solve real-life and mathematical problems involving angle measure, area, surface area, and volume.

Grade	*CCSS Domain*	*CCSS Strand*
7	**GEOMETRY**	**Draw construct and describe geometrical figures and describe the relationships between them**

Sample Task #1 (Constructed Response)

The two diagrams are scale drawings of the same room. In Diagram A, 1 centimeter represents 2 feet.

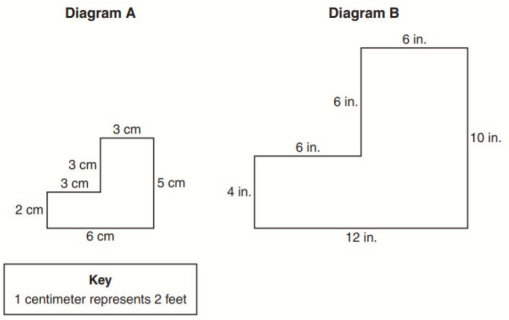

What is the scale relationship for Diagram B?

Sample Task #2 (Multiple Choice)

Marcy draws a triangle. Two sides of the triangle each measure 15 inches. Which angle measurements could be the measures of two angles in Marcy's triangle?

Grade	*CCSS Domain*	*CCSS Strand*
7	**GEOMETRY**	**Solve real-life and mathematical problems involving angle measure, area, surface area, and volume**

Sample Task #1 (Constructed Response)

. A company mails packages using three types of boxes shaped like rectangular prisms.

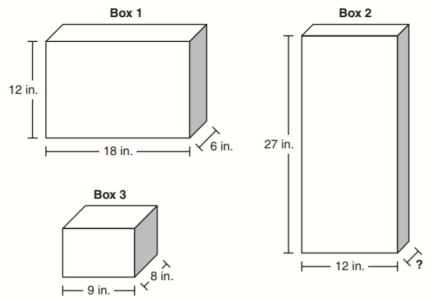

Boxes 1 and 2 have the same volume.

a. What is the width of Box 2?
Show your work or explain how you know.

b. The surface area of Box 3 is 348 square inches. What is the volume of Box 3?
Show your work or explain how you know.

Sample Task #2 (Multiple Choice)

. Milo is building a bike ramp. He makes a diagram to model the bike ramp.

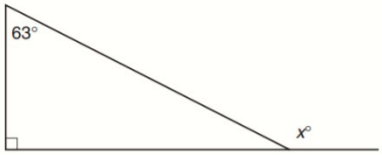

Which equation could Milo use to find the value of x in the diagram?

Ⓐ $180 - x = 180 - (90 + 63)$

Ⓑ $(63 + 90) + x = 180$

Ⓒ $x + 63 = 180$

Ⓓ $90 - x = 63$

MLSS AND CLR GUIDE

- Draw construct and describe geometrical figures and describe the relationships between them
- Solve real-life and mathematical problems involving angle measure, area, surface area, and volume.

CCSS Domain	*CCSS Cluster*
Geometry	**Draw construct and describe geometrical figures and describe the relationships between them**

Culturally and Linguistically Responsive Instruction

Relevance to Families and Communities	During a unit focused on drawing, constructing, and describing geometrical figures and describe the relationships between them, consider options for learning from your families and communities the cultural and linguistic ways this mathematics exists outside of school to create stronger home to school connections for students, for example, learning about geometric shapes are used in cultural art and design connects the students' home connections to the mathematical principles they are learning at school.	
Cross-Curricular Connections	**Science:** Model the Solar System at Scale **Art:** Geometric Drawings/ Architectural Drawing	
Validate/Affirm/Build /Bridge	• *How can you design your mathematics classroom to intentionally and purposefully legitimize the home culture and languages of students and reverse the negative stereotypes regarding the mathematical abilities of students of marginalized cultures and languages?* • *How can you create connections between the cultural and linguistic behaviors of your students' home culture and language, the culture and language of school mathematics to support students in*	• Facilitating Meaningful Mathematical Discourse: Mathematics discourse requires intentional planning to ensure all students feel comfortable to share, consider, build upon and critique the mathematical ideas under consideration. When student ideas serve as the basis for discussion, we position them as knowers and doers of mathematics by using equitable talk moves students and attending to the ways students talk about who is and isn't capable of mathematics we can disrupt the negative images and stereotypes around mathematics of marginalized cultures and languages. "A discourse-based mathematics classroom provides stronger access for every student — those who have an immediate answer or approach to share, those who have begun to formulate a mathematical approach to a task but have not fully developed their thoughts, and those who may not have an approach but can provide feedback to others." For example, when studying drawing, constructing, and describing geometrical figures and describing the relationships between

	creating mathematical identities as capable mathematicians that can use mathematics within school and society?	them facilitating meaningful mathematical discourse is critical because the standards are asking students to solve, create and describe geometric figures which lends itself to providing opportunities to purposely plan discourse for students to share their ideas and methods. In that discourse utilizing protocols that validate students' contributions connected with home culture and home language will lower students' affective filters and allow them to take risks. The protocols need to be created in a way that removes teacher's, often unknowingly, biases. These protocols should provide students opportunities to rehearse their ideas in a small group or team and then a random process of calling on students to share their thinking to the class. This affirms that all contributions are wanted and needed to build the knowledge of the whole. These types of processes affirm students that their home cultures and languages are positive assets as their contributions become a part of the curriculum. How we set up this process 41 6 is crucial. We need to have direct conversations about how different cultures talk, show body language, respond, etc. so students develop a class culture that is open and affirming.

Planning for Multi-Layered System of Supports

Vertical Alignment

Previous Learning	***Current Learning***	***Future Learning***
• In 5th grade, learners classify two dimensional figures in a hierarchy based on properties. In 6th grade, learners understand and solve ratios and rates, generate equivalent ratios, and use ratios and rates to solve problems. In 6th grade, learners calculate perimeter & area of two-dimensional figures and find volume of 3D figures. In 6th grade, students explore the characteristics of a right rectangular prism and rectangular	• In 7th grade, learners can expand their work with expressions and equations as they write and solve equations related to similar figures, scale drawings, and the missing angle measures of triangles. In 7th grade, learners' work with similar figures supplements the concepts they have already learned (or will be learning) when studying direct variation and proportional reasoning.	• In 8th grade, learners connect their previous understanding of similar figures with the properties of translations, rotations, reflections and dilations. In 8th grade, learners build on their experimentation with triangles and start to make informal arguments about their properties, such as angle sum, exterior angles of a triangle, and angles created when parallel lines are cut by a transversal line. In 8th grade, learners build on

pyramid		knowledge of triangle side lengths which leads to the investigation of the Pythagorean Theorem and its converse.

Suggested Instructional Strategies

Pre-Teach

Level of Intensity	***Essential Question***	***Examples***
Targeted	*What pre-teaching will prepare students to productively struggle with the mathematics for this cluster within your HQIM?*	During a unit focused on drawing, constructing, and describing geometrical figures and describe the relationships between them, consider options for learning from your families and communities the cultural and linguistic ways this mathematics exists outside of school to create stronger home to school connections for students, for example, learning about geometric shapes are used in cultural art and design connects the students' home connections to the mathematical principles they are learning at school.
Intensive	*What critical understandings will prepare students to access the mathematics for this cluster?*	*5.NF.B.4: This standard provides a foundation for work with solving problems involving scale drawings of geometric figures because students will do best if they have procedural fluency with their use of fractions with operations. If students have unfinished learning within this standard, based on assessment data, consider ways to provide intensive pre-teaching support prior to the start of the unit to ensure students are ready to access grade level instruction and assignments.*

Re-Teach

Level of Intensity	***Essential Question***	***Examples***
Targeted	What formative assessment data (e.g., tasks, exit tickets, observations) will help identify content needing to be revisited during a unit?	Examine assessments for evidence of lingering misconceptions (see common misconceptions). If students exhibit one more of these misconceptions, consider addressing the misconception by re-engaging with content during a unit on drawing, constructing, and describing geometrical figures and describing the relationships between them by clarifying mathematical ideas and/or concepts 5 through a short mini-lesson because when students explain their thinking and have time to process their learning misconceptions or gaps in

		learning can be addressed.
Intensive	What assessment data will help identify content needing to be revisited for intensive interventions?	Examine assessments for evidence of students still developing the underlying ideas. For example, some students may benefit from intensive extra time during and after a unit to drawing, constructing, and describing geometrical figures and describing the relationships between them by helping students move from specific answers to generalizations for certain types of problems because at times students can become too focused on the specific area within the cluster without stepping back to see the connection across the cluster, such as, students using a tool to measure the angles of triangles and are missing the larger connections of geometric principles across shapes for determining geometric conditions.

Extension	
Essential Question	***Examples***
What type of extension will offer additional challenges to 'broaden' your student's knowledge of the mathematics developed within your HQIM?	To extend students learning about drawing, constructing, and describing geometrical figures and describing the relationships between them, some learners may benefit from an extension such as open ended tasks linking multiple disciplines because students benefit when math understandings are applied to other areas of content and real-world application such as architecture, art, reconstructive surgery, etc.

CCSS Domain	*CCSS Cluster*
Geometry	**Solve real-life and mathematical problems involving angle measure, area, surface area, and volume**

Culturally and Linguistically Responsive Instruction

Relevance to Families and Communities	During a unit focused on solving real-life and mathematical problems involving angle measure, area, surface area, and volume, consider options for learning from your families and communities the cultural and linguistic ways this mathematics exists outside of school to create stronger home to school connections for students, for example, learning about how geometry problems are used in real life to solve an issue like, purchasing a new air conditioner gives students a connection on different ways solving

	real-life and mathematical problems involving angle measure, area, surface area, and volume are used in the home and community.	
Cross-Curricular Connections	**Science and Technology:** Science and math are intimately connected, particularly in fields such as chemistry, astronomy and physics. Students who can't master basic arithmetic skills will struggle to read scientific charts and graphs. More complex math, such as geometry, algebra and calculus, can help students solve chemistry problems, understand the movements of the planets and analyze scientific studies. Math is also important in practical sciences, such as engineering and computer science. Students may have to solve equations when writing computer programs and figuring out algorithms. Nursing majors may have great bedside manner. but they also need to know how to precisely calculate dosages to pass their courses. **Social Studies:** Social studies classes, such as history, often require students to review charts and graphs that provide historical data or information on ethnic groups. In geography classes, students might need to understand how the elevation of an area affects its population or chart the extent to which different populations have different average life spans. Knowledge of basic mathematical terms and formulas makes statistical information accessible **Literature and Writing**: Literature might seem like a far cry from math but mastering basic arithmetic can enable students to better understand poetry. The meter of poetry, the number of words to include in a line and the effect that certain rhythms have on the reader are all products of mathematical calculations. At a more mundane level, math can help students plan reading assignments in literature classes by discerning their average reading time and estimating how long it will take them to read a particular work. The linear, logical thinking used in mathematical problems can also help students write more clearly and logically. **Art/Music:** Students interested in pursuing careers in theater, music, dance or art can benefit from basic mathematical knowledge. Musical rhythm often follows complex mathematical series, and math can help students learn the basic rhythms of dances used in ballet and theater performances. Art thrives on geometry, and students who understand basic geometric formulas can craft impressive art pieces. Photographers use math to calculate shutter speed, focal length, lighting angles and exposure time.	
Validate/Affirm/Build /Bridge	• *How can you design your mathematics classroom to intentionally and purposefully legitimize the home culture and languages of students and reverse the negative*	• Using and Connecting Mathematical Representations: The standard for mathematical practice, use appropriate tools strategically, provides a strong foundation to validate and bridge for students. Mathematical representations are mathematical tools. The linguistic and cultural experiences of students provide different and varied

	stereotypes regarding the mathematical abilities of students of marginalized cultures and languages? • *How can you create connections between the cultural and linguistic behaviors of your students' home culture and language, the culture and language of school mathematics to support students in creating mathematical identities as capable mathematicians that can use mathematics within school and society?*	types of representations for solving mathematical problems. By explicitly encouraging students to use multiple mathematical representations students can draw on their "mathematical, social, and cultural competence". By valuing these representations and discussing them we can connect student representations to the representations of school mathematics and build a bridge for students to position them as competent and capable mathematicians. For example, when studying Solving real-life and mathematical problems involving angle measure, area, surface area, and volume the use of mathematical representations within the classroom is critical because understanding how to read or interpret geometry drawings and the nomenclature for representations can allow students to draw on their experiences.

Planning for Multi-Layered System of Supports

Vertical Alignment

Previous Learning	***Current Learning***	***Future Learning***
• In 4th grade, students learned how to find the area of rectangles, special quadrilaterals, triangles, and polygons. In 6th grade, students began to explore volume, finding the volume of rectangular prisms, finding surface area using nets, and finding volume of rectangular prisms.	• Throughout 7th grade, students will use their knowledge of angle measurements along with algebra to determine missing information about particular geometric figures.	• In 8th grade, learners use the formulas from within this cluster to find the volume of cones, cylinders, and spheres.

Suggested Instructional Strategies

Pre-Teach

Level of Intensity	***Essential Question***	***Examples***
Targeted	*What pre-teaching will*	For example, some learners may benefit from targeted

	prepare students to productively struggle with the mathematics for this cluster within your HQIM?	pre-teaching that introduces new representations (e.g., scaled images) when studying Real-Life and Mathematical Problems Involving Angle Measure, Area, Surface Area, And Volume because students can use this skill to solve real-world mathematical problems.
Intensive	*What critical understandings will prepare students to access the mathematics for this cluster?*	*6.G.A.1: This standard provides a foundation for work with solving Real-Life and Mathematical Problems Involving Angle Measure, Area, Surface Area, And Volume because solving problems involving areas and volumes provide a context for developing and using equations. If students have unfinished learning within this standard, based on assessment data, consider ways to provide intensive pre-teaching support prior to the start of the unit to ensure students are ready to access grade level instruction and assignments.*
Re-Teach		
Level of Intensity	***Essential Question***	***Examples***
Targeted	What formative assessment data (e.g., tasks, exit tickets, observations) will help identify content needing to be revisited during a unit?	Examine assessments for evidence of lingering misconceptions (see common misconceptions). If students exhibit one more of these misconceptions, consider addressing the misconception by re-engaging with content during a unit on solving Real-Life And Mathematical Problems Involving Angle Measure, Area, Surface Area, And Volume by critiquing student approaches/solutions to make connections through a short mini-lesson because they can see multiple ways to solve a problem or reasons why a solution is incorrect or correct.
Intensive	What assessment data will help identify content needing to be revisited for intensive interventions?	Examine assessments for evidence of students still developing the underlying ideas some students may benefit from intensive extra time during and after a unit solving Real-Life And Mathematical Problems Involving Angle Measure, Area, Surface Area, And Volume by offering opportunities to understand and explore different strategies because they can see multiple ways to solve a problem or reasons why a solution is incorrect or incorrect and find new ways to approach a problem

Extension	
Essential Question	***Examples***
What type of extension will offer additional challenges to 'broaden' your student's knowledge of the mathematics developed within your HQIM?	To extend students learning about. For example, some learners may benefit from an extension such as in-depth, self-directed exploration of self-selected topics when studying solving Real-Life and Mathematical Problems Involving Angle Measure, Area, Surface Area, And Volume because there are many applications of geometry in life that a student might have interest in, for example, building a treehouse.

New Mexico Instructional Scope

7th Grade Number System Guide

The purpose of this tool is to help educators understand each of the grade level standards and how those standards connect to the students' overall preparation for college and career readiness.

The NMIS is a teacher-influenced tool, designed to provide instructional planning support at the programmatic level for districts and instructional level for teachers. Its foundation stems from the vision and mission of the PED and came into existence to assure that students in NM will be engaged in a culturally and linguistically responsive educational system that meets the social, emotional, and academic needs of ALL students. This is also rooted in the belief that all students must have access to on-grade-level standards, focusing on acceleration. The purpose of this tool is to help educators understand each of the grade level standards and how those standards connect to the students' overall preparation for college and career readiness.

Standards are defined as the most critical prerequisite skills and knowledge. This document is color-coded to reflect both anchor and priority standards. Though previous emphasis was placed on priority standards to address lost learning due to COVID-19, New Mexico teachers should note that moving forward, while priority standards allow for acceleration of learning, all standards should be addressed in instruction throughout the school year.

In this guide you will find:

- A breakdown of each of the grade level standards within the cluster, including:
  - Standards of Mathematical Practice
  - Common Misconceptions
  - Identification of Priority Standards, as identified by NMPED.
  - Level of Rigor Identification
- Sample aligned assessment items
- Suggested Student Discourse Guide
- A multilayered system of supports (MLSS) and culturally and linguistically responsive instruction (CLR) guide

New Mexico Instructional Scope

7th Grade Number System Guide

Key		
	Priority Standard	Priority standards, as identified by NMPED, are denoted with red highlighting. Priority standards are the most critical prerequisite skills and knowledge a student needs. This does not mean that these are only standards required to be taught, just these are the standards that will allow for the acceleration the students of New Mexico need during this time.
	*Conceptual Understanding*	Conceptual Understanding standards help students build a deep understanding of the **how** and **why** of mathematics.
	*Application*	Application standards help students identify the appropriate concepts and skills to tackle **novel real-world problems.**
	*Procedural Skill and Fluency*	Procedural standards help students develop **efficiency** and **accuracy** in computations.

Standards Breakdown

- Apply and extend previous understandings of operations with fractions to add, subtract, multiply, and divide rational numbers.
  - 7.NS.A.1
  - 7.NS.A.2
  - 7.NS.A.3

Grade	*CCSS Domain*	*CCSS Cluster*
7	**THE NUMBER SYSTEM**	**Apply and extend previous understandings of operations with fractions to add, subtract, multiply, and divide rational numbers**

Cluster Standard: 7.NS.A.1

Standard	Standards for Mathematical Practice
Apply and extend previous understandings of addition and subtraction to add and subtract rational numbers; represent addition and subtraction on a horizontal or vertical number line diagram. A: Describe situations in which opposite quantities combine to make 0. For example, a hydrogen atom has 0 charge because its two constituents are oppositely charged. B: Understand p + q as the number located a distance |q| from p, in the positive or negative direction depending on whether q is positive or negative. Show that a number and its opposite have a sum of 0 (are additive inverses). Interpret sums of rational numbers by describing real-world contexts. C: Understand subtraction of rational numbers as adding the additive inverse, p – q = p + (–q). Show that the distance between two rational numbers on the number line is the absolute value of their difference and apply this principle in real-world contexts. D: Apply properties of operations as strategies to add and subtract rational numbers.	• **SMP 5:** Use appropriate tools strategically. • **SMP 8:** Look for and express regularity in repeated reasoning.
Clarification Statement	**Students Who Demonstrate Understanding Can...**
• Students learn to add and subtract rational numbers. As students begin this work visual representations are critical; they become less necessary as students become more fluent with these operations. In sixth grade, students found	• Solve numerical addition and subtraction equations by using the properties of operations • Define and apply the commutative, associative, and additive identity properties to rational numbers

the distance of horizontal and vertical segments on the coordinate plane. In seventh grade, students build on this understanding to recognize subtraction as finding the distance between two numbers on a number line. This standard allows for adding and subtracting negative fractions and decimals and interpreting solutions in a given context. Students should learn to use the terms “rational numbers”, “additive inverse”, and “integers” with increasing precision	● Formulate rules for integer operations ● Expressively (orally and in writing) express understanding of “positive”, “negative”, “additive inverse”, and “zero” ● Model combining positive and negative numbers and provide a rationale for their solutions ● Apply mathematics to real world examples of positive and negative numbers
DOK	**Blooms**
1-2	Understand

New Mexico Instructional Scope

7th Grade Number System Guide

Grade	*CCSS Domain*	*CCSS Cluster*
7	**THE NUMBER SYSTEM**	**Apply and extend previous understandings of operations with fractions to add, subtract, multiply, and divide rational numbers.**

Cluster Standard: 7.NS.A.2

Standard	Standards for Mathematical Practice
Apply and extend previous understandings of multiplication and division and of fractions to multiply and divide rational numbers. A: Understand that multiplication is extended from fractions to rational numbers by requiring that operations continue to satisfy the properties of operations, particularly the distributive property, leading to products such as (–1)(–1) = 1 and the rules for multiplying signed numbers. Interpret products of rational numbers by describing real-world contexts. B: Understand that integers can be divided, provided that the divisor is not zero, and every quotient of integers (with non-zero divisor) is a rational number. If p and q are integers, then –(p/q) = (–p)/q = p/(– q). Interpret quotients of rational numbers by describing real world contexts. C: Apply properties of operations as strategies to multiply and divide rational numbers. D: Convert a rational number to a decimal using long division; know that the decimal form of a rational number terminates in 0s or eventually repeats.	• **SMP 5:** Use appropriate tools strategically. • **SMP 6**: Attend to precision.
Clarification Statement	**Students Who Demonstrate Understanding Can...**
• Students learn to add and subtract rational numbers. As students begin this work visual representations are critical; they become less necessary as students become more fluent with these operations. In sixth grade, students found	• Discover the rules for multiplying rational numbers Refer to the negative (-) sign correctly as “negative” or ``the opposite of” to make sense of real-world context. • Conclude that properties of the operations for

the distance of horizontal and vertical segments on the coordinate plane. In seventh grade, students build on this understanding to recognize subtraction as finding the distance between two numbers on a number line. This standard allows for adding and subtracting negative fractions and decimals and interpreting solutions in a given context. Students should learn to use the terms “rational numbers”, “additive inverse”, and “integers” with increasing precision.	multiplication are still applicable to rational numbers. ● Use reasoning to determine that division by zero is undefined. ● Discover that division as the inverse of multiplication still applies to rational numbers. ● Generalize rules for division with signed numbers from examples. Use and articulate notations interchangeably p ÷(-q) is the same as p⁄-q. Interpret a rational quotient ● Clarify their own understanding of the relationship between multiplications and division of rational numbers through writing. ● Develop fluency through practice with multiplication and division of rational numbers. ● Use properties of the operations to explain the solutions to real world problems. ● Clarify and explain their understanding of properties of operations using mathematical discourse. ● Use math vocabulary appropriately. ● Use long division to convert rational numbers in fraction form to decimal form ● Explain why and how they know a long division quotient will repeat. ● Sort the decimal form of a rational numbers into two types: terminating or repeating
DOK	**Blooms**
1-2	Understanding, Apply

New Mexico Instructional Scope

7th Grade Number System Guide

Grade	*CCSS Domain*	*CCSS Cluster*
7	**THE NUMBER SYSTEM**	**Apply and extend previous understandings of operations with fractions to add, subtract, multiply, and divide rational numbers.**

Cluster Standard: 7.NS.A.3

Standard	Standards for Mathematical Practice
Solve real-world and mathematical problems involving the four operations with rational numbers. (Computations with rational numbers extend the rules for manipulating fractions to complex fractions.)	• **SMP 2**: Reason abstractly and quantitatively. • **SMP 3**: Construct viable arguments and critique the reasoning of others. • **SMP 4**: Model with mathematics.
Clarification Statement	**Students Who Demonstrate Understanding Can...**
• Students learn to add and subtract rational numbers. As students begin this work visual representations are critical; they become less necessary as students become more fluent with these operations. In sixth grade, students found the distance of horizontal and vertical segments on the coordinate plane. In seventh grade, students build on this understanding to recognize subtraction as finding the distance between two numbers on a number line. This standard allows for adding and subtracting negative fractions and decimals and interpreting solutions in given context. Students should learn to use the terms “rational numbers”, “additive inverse”, and “integers” with increasing precision	• Apply operations with rational numbers to problems that involve the order of operations • Solve mathematical problems that use the four operations with rational numbers • Compute with complex fractions
DOK	**Blooms**
1-2	Understand, Apply

Common Misconceptions

- The major misconceptions in this cluster are around the conceptualization of integer operations and the properties of subtraction. Students may struggle with using the number line to understand positive and

negative numbers as distances from zero. It is important to use models to allow students to visualize rational numbers. When moving into operations, subtraction can lead to misconceptions when students must recall that subtraction is not commutative. They also may find difficulties with conceptualization when expressing that subtraction is the same as adding the inverse.

Student Discourse Guide

- **Purposeful, rich classroom discourse offers students the opportunity to express their ideas, thinking, and to critique the reasoning of others in a variety of ways (writing, drawing, verbal). Purposeful implementation of classroom discourse allows students to activate funds of knowledge and to refine their mathematical understanding. When students have frequent opportunities for discourse they find various paths to solutions and reveal knowledge or misunderstandings to educators. The process also allows educators to honor students' culture, lived experiences and evolving math identities.**
- **Discourse that focuses on tasks that promote reasoning and problem solving is a primary mechanism for developing conceptual understanding and meaningful learning of mathematics (Michaels, O'Connor, and Resnick, 2008)**

Domain: **The Number System**	Strand: **Apply and extend previous understandings of operations with fractions to add, subtract, multiply, and divide rational numbers**

Suggested Student Discourse Questions

• How can we predict that the sum of two integers is positive, negative or zero? • How is subtraction the same as adding the inverse (additive property)?	• How can we make a connection between the commutative property and how we live in our community? • What is the difference between the opposite and the absolute value of a number?

ASSESSMENT GUIDE

- Apply and extend previous understandings of operations with fractions to add, subtract, multiply, and divide rational numbers.

Grade	*CCSS Domain*	*CCSS Strand*
7	**THE NUMBER SYSTEM**	**Apply and extend previous understandings of operations with fractions to add, subtract, multiply, and divide rational numbers.**

Sample Task #1 (Constructed Response)

. Michael has a jar with 24 coins.

- $\frac{3}{8}$ of the coins are United States coins.
- The rest of the coins are foreign coins.

Michael adds 12 United States coins to the jar.

a. What fraction of the coins in the jar are **foreign** coins now? Show your work or explain how you know.

Michael continues to add United States coins to the jar.

b. How many more United States coins must Michael add to the jar so that $\frac{1}{8}$ of the coins are foreign coins? Show your work or explain how you know.

Sample Task #2 (Multiple Choice)

. Look at this expression.

$$\left(-\frac{3}{5}\right)\times\left(-\frac{7}{8}\right)$$

Which statement about the expression is true?

Ⓐ The product is greater than 1.
Ⓑ The product is a negative number.
Ⓒ The product is less than both factors.
Ⓓ The product is greater than both factors.

MLSS AND CLR GUIDE

- Apply and extend previous understandings of operations with fractions to add, subtract, multiply, and divide rational numbers.

CCSS Domain	*CCSS Cluster*
The Number System	**Apply and extend previous understandings of operations with fractions to add, subtract, multiply, and divide rational numbers**

Culturally and Linguistically Responsive Instruction

Relevance to Families and Communities	During a unit focused on apply and extend previous understanding of operations with fractions, consider options for learning from your families and communities the cultural and linguistic ways this mathematics exists outside of school to create stronger home to school connections for students, for example, fractions are used for cooking, the amount of ingredients may need to increase or decrease based on the members of the family. Being able to convert fractions is essential.
Cross-Curricular Connections	**Science and Technology:** Science and math are intimately connected, particularly in fields such as chemistry, astronomy and physics. Students who can't master basic arithmetic skills will struggle to read scientific charts and graphs. More complex math, such as geometry, algebra and calculus, can help students solve chemistry problems, understand the movements of the planets and analyze scientific studies. Math is also important in practical sciences, such as engineering and computer science. Students may have to solve equations when writing computer programs and figuring out algorithms. Nursing majors may have great bedside manner. but they also need to know how to precisely calculate dosages to pass their courses. **Social Studies:** Social studies classes, such as history, often require students to review charts and graphs that provide historical data or information on ethnic groups. In geography classes, students might need to understand how the elevation of an area affects its population or chart the extent to which different populations have different average life spans. Knowledge of basic mathematical terms and formulas makes statistical information accessible **Literature and Writing**: Literature might seem like a far cry from math but mastering basic arithmetic can enable students to better understand poetry. The meter of poetry, the number of words to include in a line and the effect that certain rhythms have on the reader are all products of mathematical calculations. At a more mundane level, math can help students plan reading assignments in literature classes by

	discerning their average reading time and estimating how long it will take them to read a particular work. The linear, logical thinking used in mathematical problems can also help students write more clearly and logically. **Art/Music:** Students interested in pursuing careers in theater, music, dance or art can benefit from basic mathematical knowledge. Musical rhythm often follows complex mathematical series, and math can help students learn the basic rhythms of dances used in ballet and theater performances. Art thrives on geometry, and students who understand basic geometric formulas can craft impressive art pieces. Photographers use math to calculate shutter speed, focal length, lighting angles and exposure time.	
Validate/Affirm/Build/Bridge	• *How can you design your mathematics classroom to intentionally and purposefully legitimize the home culture and languages of students and reverse the negative stereotypes regarding the mathematical abilities of students of marginalized cultures and languages?* • *How can you create connections between the cultural and linguistic behaviors of your students' home culture and language, the culture and language of school mathematics to support students in creating mathematical identities as capable mathematicians that can use mathematics within school and society?*	• Goal Setting: Setting challenging but attainable goals with students can communicate the belief and expectation that all students can engage with interesting and rigorous mathematical content and achieve in mathematics. Unfortunately, the reverse is also true, when students encounter low expectations through their interactions with adults and the media, they may see little reason to persist in mathematics, which can create a vicious cycle of low expectations and low achievement. For example, when studying application and extension of previous understandings of operations with fractions to add, subtract, multiply, and divide with rational numbers, goal setting is critical because it provides students opportunities to use mathematics to understand and investigate meaningful situations.

Planning for Multi-Layered System of Supports

Vertical Alignment		
Previous Learning	***Current Learning***	***Future Learning***

• In grade 6, learners understand that positive and negative numbers are used together to describe quantities having opposite directions or values. In grade 6, learners solve problems involving fractions by fractions. In grade 6, learners use order of operations to solve problems	• In grade 7, learners apply and extend previous understandings of operations with fractions to add, subtract, multiply, and divide rational numbers. In grade 7, learners solve multi-step real-life and mathematical problems posed with positive and negative rational numbers in any form. In grade 7, learners use variables to represent quantities in a real-world or mathematical problem and construct simple equations and inequalities to solve problems by reasoning about the quantities.	• In grade 8, learners understand that there are numbers that are not rational and approximate them by rational numbers. In grade 8, learners use square root and cube root symbols to represent solutions to equations of the form x6 2 = p and x 3 = p, where p is a positive rational number.

Suggested Instructional Strategies

Pre-Teach

Level of Intensity	***Essential Question***	***Examples***
Targeted	*What pre-teaching will prepare students to productively struggle with the mathematics for this cluster within your HQIM?*	For example, some learners may benefit from targeted pre-teaching that rehearses prior learning when studying application and extension of previous understandings of operations with fractions to add, subtract, multiply, and divide with rational numbers because students learn best when concepts are connected, and they can “see” the connection across and within grade levels. This allows a familiarity and comfort level to approach new or different tasks using what they already know.
Intensive	*What critical understandings will prepare students to access the mathematics for this cluster?*	*6.NS.C.5 This standard provides a foundation for work with applying and extending previous understandings of operations with fractions to add, subtract, multiply, and 5 divide rational numbers because in Grade 6, the number line is extended to include negative numbers. Students initially encounter negative numbers in contexts where it is natural to describe both the magnitude of the quantity, e.g. vertical distance from sea level in meters, and the direction of the quantity (above or below sea level). If students have unfinished learning within this standard, based on assessment data, consider ways to provide intensive pre-teaching support prior to the start of the unit to ensure students are ready to access grade level instruction and assignments.*

Universal Support Framework		
A student should know/understand...	A student should be able to do...	***Potential Scaffolds***

• A number and its opposite are equidistant from zero. Opposites are called additive inverses because their sum is zero.
• Understand that |p| is the (positive) distance from p to zero on a number line, regardless of which direction p is from zero.
• Subtraction of integers is the same as adding the opposite.
• Different interpretations for the (−) sign such as "negative" or "the opposite of"
	• Use properties to add or subtract rational numbers.
	• Multiply and divide rational numbers and use properties of arithmetic to model multiplication and division of rational numbers.
	• Convert a rational number into a terminating or repeating decimal using long division.
	• Solve real world problems involving the four operations with rational numbers.
	•
		• Build on students' experience with the following skills:
		  ○
		  ○ Understand positive and negative numbers.
		  ○ Understand how positive and negative numbers are used together to describe quantities having opposite directions or values.
		  ○ Solve problems involving fractions by fractions.
		  ○ Use order of operations to solve problems.
		
		• Cognitive Strategies
		  ○ Repeatedly model the strategies
		  ○ Monitor the students' use of the strategies
		  ○ Provide feedback to students
		  ○ Teach self-questioning and self-monitoring strategies
		  ○ Introduce multiple means of representation for mathematical ideas
		
		• Encourage students to use alternative tools to better access the grade level content. Examples include:
		  ○ Multiplication chart
		  ○ Divisibility Rules (Prime Factorization)

Re-Teach		
Level of Intensity	***Essential Question***	***Examples***
Targeted	What formative assessment data (e.g., tasks, exit tickets, observations) will help identify content needing to be revisited during a unit?	Examine assessments for evidence of lingering misconceptions (see common misconceptions). If students exhibit one more of these misconceptions, consider addressing the misconception by re-engaging with content during a unit on applying and extending previous understandings of operations with fractions to

		add, subtract, multiply, and divide rational numbers by clarifying mathematical ideas and/or concepts through a short mini lesson because it identifies and corrects 7 misconceptions, allows for quick formative checks for understanding to move learning forward.
Intensive	What assessment data will help identify content needing to be revisited for intensive interventions?	Examine assessments for evidence of students still developing the underlying ideas. For example, some students may benefit from intensive extra time during and after a unit applying and extending previous understandings of operations with fractions to add, subtract, multiply, and divide rational numbers by confronting student misconceptions because it allows response to instruction as well as to response to intervention.

Extension	
Essential Question	***Examples***
What type of extension will offer additional challenges to 'broaden' your student's knowledge of the mathematics developed within your HQIM?	To extend students learning : For example, some learners may benefit from an extension such as in-depth, self-directed exploration of self-selected topics when studying application and extension of previous understandings of operations with fractions to add, subtract, multiply, and divide with rational numbers because extension and/or enrichments using rich mathematical tasks can be essential for engaging learners and creating dynamic classrooms. Rich modeling tasks are often the missing piece in problem-solving experiences in the classroom.

New Mexico Instructional Scope

7th Grade Statistics and Probability Guide

The purpose of this tool is to help educators understand each of the grade level standards and how those standards connect to the students' overall preparation for college and career readiness.

The NMIS is a teacher-influenced tool, designed to provide instructional planning support at the programmatic level for districts and instructional level for teachers. Its foundation stems from the vision and mission of the PED and came into existence to assure that students in NM will be engaged in a culturally and linguistically responsive educational system that meets the social, emotional, and academic needs of ALL students. This is also rooted in the belief that all students must have access to on-grade-level standards, focusing on acceleration. The purpose of this tool is to help educators understand each of the grade level standards and how those standards connect to the students' overall preparation for college and career readiness.

Standards are defined as the most critical prerequisite skills and knowledge. This document is color-coded to reflect both anchor and priority standards. Though previous emphasis was placed on priority standards to address lost learning due to COVID-19, New Mexico teachers should note that moving forward, while priority standards allow for acceleration of learning, all standards should be addressed in instruction throughout the school year.

In this guide you will find:

- A breakdown of each of the grade level standards within the cluster, including:
    - Standards of Mathematical Practice
    - Common Misconceptions
    - Identification of Priority Standards, as identified by NMPED.
    - Level of Rigor Identification
- Sample aligned assessment items
- Suggested Student Discourse Guide
- A multilayered system of supports (MLSS) and culturally and linguistically responsive instruction (CLR) guide

New Mexico Instructional Scope

7th Grade Statistics and Probability Guide

Key		
	Priority Standard	Priority standards, as identified by NMPED, are denoted with red highlighting. Priority standards are the most critical prerequisite skills and knowledge a student needs. This does not mean that these are only standards required to be taught, just these are the standards that will allow for the acceleration the students of New Mexico need during this time.
	Conceptual Understanding	Conceptual Understanding standards help students build a deep understanding of the **how** and **why** of mathematics.
	Application	Application standards help students identify the appropriate concepts and skills to tackle **novel real-world problems.**
	Procedural Skill and Fluency	Procedural standards help students develop **efficiency** and **accuracy** in computations.

Standards Breakdown

- Use random sampling to draw inferences about a population.
  - 7.SP.A.1
  - 7.SP.A.2
- Draw informal comparative inferences about two populations.
  - 7.SP.B.3
  - 7.SP.B.4
- Investigate chance processes and develop, use, and evaluate probability models.
  - 7.SP.C.5
  - 7.SP.C.6
  - 7.SP.C.7
  - 7.SP.C.8

Grade	*CCSS Domain*	*CCSS Cluster*
7	**STATISTICS & PROBABILITY**	**Use random sampling to draw inferences about a population.**

Cluster Standard: 7.SP.A.1

Standard	Standards for Mathematical Practice
Understand that statistics can be used to gain information about a population by examining a sample of the population; generalizations about a population from a sample are valid only if the sample is representative of that population. Understand that random sampling tends to produce representative samples and support valid inferences.	• **SMP 2:** Reason abstractly and quantitatively. • **SMP 3:** Construct viable arguments and critique the reasoning of others. • **SMP 4**: Model with mathematics. • **SMP 5**: Use appropriate tools strategically.
Clarification Statement	**Students Who Demonstrate Understanding Can...**
• Students learn about sampling populations and that a sampling must be representative of the population in order to make valid inferences and generalizations. To measure variation and estimates or predictions about a characteristic, students must conduct multiple samples of the same size from populations with unknown characteristics	• Critique examples of sampling as statistical tools using precise mathematical vocabulary; random sampling, population, and valid generalization. • Design random samplings to collect the data given statistical questions. • Defend the samplings as random.
DOK	**Blooms**
1-2	Understand, Apply

Grade	*CCSS Domain*	*CCSS Cluster*
7	**STATISTICS & PROBABILITY**	**Use random sampling to draw inferences about a population.**

Cluster Standard: 7.SP.A.2

Standard	Standards for Mathematical Practice
Use data from a random sample to draw inferences about a population with an unknown characteristic of interest. Generate multiple samples (or simulated samples) of the same size to gauge the variation in estimates or predictions. For example, estimate the mean word length in a book by randomly sampling words from the book; predict the winner of a school election based on randomly sampled survey data. Gauge how far off the estimate or prediction might be	• **SMP 2:** Reason abstractly and quantitatively. • **SMP 3:** Construct viable arguments and critique the reasoning of others. • **SMP 4**: Model with mathematics.
Clarification Statement	**Students Who Demonstrate Understanding Can...**
• Students learn about sampling populations and that a sampling must be representative of the population in order to make valid inferences and generalizations. To measure variation and estimates or predictions about a characteristic, students must conduct multiple samples of the same size from populations with unknown characteristics	• Draw valid inferences and generalizations from random samplings of populations • Justify their inferences and generalizations as valid using appropriate vocabulary • Explain the variability in multiple random samples and gauge how far off an estimate may be.
DOK	**Blooms**
1-2	Understand, Apply

Common Misconceptions

• Use random sampling to draw inferences about a population	• The concept of random is difficult for some students. It may be necessary to physically demonstrate a random vs a non-random sampling to eliminate misconceptions. For example, a non-random sampling would be to ask all girls to stand up to answer a question about video game

	preferences. A random sample would be to ask every third student to answer the same question. Ask students to compare and contrast answers for each example.

Grade	*CCSS Domain*	*CCSS Cluster*
7	**STATISTICS & PROBABILITY**	**Draw informal comparative inferences about two populations**

Cluster Standard: 7.SP.B.3

Standard	Standards for Mathematical Practice
Informally assess the degree of visual overlap of two numerical data distributions with similar variabilities, measuring the difference between the centers by expressing it as a multiple of a measure of variability. For example, the mean height of players on the basketball team is 10 cm greater than the mean height of players on the soccer team, about twice the variability (mean absolute deviation) on either team; on a dot plot, the separation between the two distributions of heights is noticeable	• **SMP 5**: Use appropriate tools strategically. • **SMP 8**: Look for and express regularity in repeated reasoning.
Clarification Statement	**Students Who Demonstrate Understanding Can...**
• In this cluster students draw valid comparable inferences about two populations using measures of center (mean, median) and measures of variability (mean absolute deviation, interquartile range).	• Find measures of center and measures of variation for two or more data sets. • Compare two data sets for variability by comparing graphs. • Make inferences about data sets by comparing their statistical measures. • Model and compare two real-world data sets by measuring the difference between centers and expressing it multiple of a measure of variability
DOK	**Blooms**
1-2	Understand, Evaluate

Grade	*CCSS Domain*	*CCSS Cluster*
7	**STATISTICS & PROBABILITY**	**Draw informal comparative inferences about two populations**

Cluster Standard: 7.SP.B.4

Standard	Standards for Mathematical Practice
Use measures of center and measures of variability for numerical data from random samples to draw informal comparative inferences about two populations. For example, decide whether the words in a chapter of a seventh-grade science book are generally longer than the words in a chapter of a fourth-grade science book.	• **SMP 1**: Make sense of problems and persevere in solving them. • **SMP 6:** Attend to precision.
Clarification Statement	**Students Who Demonstrate Understanding Can...**
• In this cluster students draw valid comparable inferences about two populations using measures of center (mean, median) and measures of variability (mean absolute deviation, interquartile range).	• Draw valid comparative inferences about two populations. • Select the appropriate measure(s) of center (mean and median) or variability (MAD and IQR) when comparing two sets of data and justify that selection.
DOK	**Blooms**
1-2	Understand, Evaluate

Common Misconceptions

• Students may struggle with the key vocabulary utilized within this cluster. It will be important to emphasize vocabulary acquisition.	

Grade	*CCSS Domain*	*CCSS Cluster*
7	**STATISTICS & PROBABILITY**	**Investigate chance processes and develop, use, and evaluate probability models.**

Cluster Standard: 7.SP.C.5

Standard	Standards for Mathematical Practice
Understand that the probability of a chance event is a number between 0 and 1 that expresses the likelihood of the event occurring. Larger numbers indicate greater likelihood. A probability near 0 indicates an unlikely event, a probability around 1/2 indicates an event that is neither unlikely or likely, and a probability near 1 indicates a likely event.	• **SMP 2**: Reason abstractly and quantitatively. • **SMP 7:** Look for and make use of structure.
Clarification Statement	**Students Who Demonstrate Understanding Can...**
• This cluster focuses on probability and is the first-time students encounter this topic formally. Students learn the likelihood of chance events and approximate probabilities. They investigate chance using probability models they develop. The cluster begins with single events and builds up to finding the probability of compound events using tree diagrams, lists, tables, and simulations.	• In writing, express the likelihood of a chance event with a probability range from 0 to 1. • Recognize that the probability of any single event can be expressed with the terms impossible, unlikely, equally likely, likely, or certain. • Express probability as a fraction, decimal or percent
DOK	**Blooms**
1	Understand

Grade	*CCSS Domain*	*CCSS Cluster*
7	**STATISTICS & PROBABILITY**	**Investigate chance processes and develop, use, and evaluate probability models.**

Cluster Standard: 7.SP.C.6

Standard	Standards for Mathematical Practice
Approximate the probability of a chance event by collecting data on the chance process that produces it and observing its long-run relative frequency and predict the approximate relative frequency given the probability. For example, when rolling a number cube 600 times, predict that a 3 or 6 would be rolled roughly 200 times, but probably not exactly 200 times	• **SMP 4**: Model with mathematics. • **SMP 8**: Look for and express regularity in repeated reasoning.
Clarification Statement	**Students Who Demonstrate Understanding Can...**
• This cluster focuses on probability and is the first-time students encounter this topic formally. Students learn the likelihood of chance events and approximate probabilities. They investigate chance using probability models they develop. The cluster begins with single events and builds up to finding the probability of compound events using tree diagrams, lists, tables, and simulations.	• Collect data on chance events (hands-on events such as spinning a spinner and simulations) and approximate the relative frequency of an event given the probability. • Students recognize that as the number of trials increase, the relative frequency approaches the probability • Explain the difference between relative frequency and theoretical probability using appropriate language • Determine the sample space for a probability model
DOK	**Blooms**
2-3	Understand, Apply

Grade	*CCSS Domain*	*CCSS Cluster*
7	**STATISTICS & PROBABILITY**	**Investigate chance processes and develop, use, and evaluate probability models.**

Cluster Standard: 7.SP.C.7

Standard	Standards for Mathematical Practice
Develop a probability model and use it to find probabilities of events. Compare probabilities from a model to observed frequencies; if the agreement is not good, explain possible sources of the discrepancy **A**: Develop a uniform probability model by assigning equal probability to all outcomes and use the model to determine probabilities of events. For example, if a student is selected at random from a class, find the probability that Jane will be selected and the probability that a girl will be selected **B**:Develop a probability model (which may not be uniform) by observing frequencies in data generated from a chance process. For example, find the approximate probability that a spinning penny will land heads up or that a tossed paper cup will land open-end down. Do the outcomes for the spinning penny appear to be equally likely based on the observed frequencies?	• **SMP 3:** Construct viable arguments and critique the reasoning of others. • **SMP 6**: Attend to precision.
Clarification Statement	**Students Who Demonstrate Understanding Can...**
• This cluster focuses on probability and is the first-time students encounter this topic formally. Students learn the likelihood of chance events and approximate probabilities. They investigate chance using probability models they develop. The cluster begins with single events and builds up to finding the probability of compound events using tree diagrams, lists, tables, and simulations.	• Calculate the probability of a (simple) event as a fraction, decimal, or percent. • Determine the probability of events by developing uniform and non-uniform probability models (theoretical probability). • Compare the models to the observed frequency and explain their reasoning for any discrepancies between the model and the observed frequency using appropriate vocabulary. • Develop their understanding of probability by making predictions, comparing the predictions, replicating experiments, and comparing results.
DOK	**Blooms**

2-3	Apply, Analyze, Evaluate

Grade	*CCSS Domain*	*CCSS Cluster*
7	**STATISTICS & PROBABILITY**	**Investigate chance processes and develop, use, and evaluate probability models.**

Cluster Standard: 7.SP.C.8

Standard	Standards for Mathematical Practice
Find probabilities of compound events using organized lists, tables, tree diagrams, and simulation. **A**: Understand that, just as with simple events, the probability of a compound event is the fraction of outcomes in the sample space for which the compound event occurs. **B:** Represent sample spaces for compound events using methods such as organized lists, tables and tree diagrams. For an event described in everyday language (e.g., "rolling double sixes"), identify the outcomes in the sample space which compose the event. **C:** Design and use a simulation to generate frequencies for compound events. For example, use random digits as a simulation tool to approximate the answer to the question: If 40% of donors have type A blood, what is the probability that it will take at least 4 donors to find one with type A blood?	• **SMP 1:** Make sense of problems and persevere in solving them. • **SMP 6:** Attend to precision.
Clarification Statement	**Students Who Demonstrate Understanding Can...**
• This cluster focuses on probability and is the first-time students encounter this topic formally. Students learn the likelihood of chance events and approximate probabilities. They investigate chance using probability models they develop. The cluster begins with single events and builds up to finding the probability of compound events using tree diagrams, lists, tables, and simulations.	• Understand similarities and differences between compound events and simple events. • Find the sample space of a compound event. • Create organized lists, tables, tree diagrams, and simulations to find the probability of a compound event. • Represent the probability of a compound event as a fraction, decimal, or percent. • Design and use a simulation (using a random number table, calculator, dice, cards, or other manipulatives) to generate frequencies of compound events.

	• Justify their selection of a particular situation and explain how it models a compound event
DOK	**Blooms**
1-2	Understand, Apply

Common Misconceptions

• Relative frequency may be difficult to understand, students may want to express this as probability. Explain how probability helps determine the approximate relative frequency. • Reviewing and understanding vocabulary words is crucial for this standard. Use words frequently and have students discuss them during class discussion.	• Keeping lines straight when using tree diagrams can be difficult. Encourage students to use graph paper and a ruler in order to keep the outcomes apart from each other. There is a greater chance when students create lists randomly, they will miss one or more outcomes.

ASSESSMENT GUIDE

- Use random sampling to draw inferences about a population.
- Draw informal comparative inferences about two populations.
- Investigate chance processes and develop, use, and evaluate probability models

Grade	*CCSS Domain*	*CCSS Strand*
7	**STATISTICS & PROBABILITY**	**Use random sampling to draw inferences about a population.**

Sample Task #1 (Constructed Response)

Dustin randomly surveys 50 students about their favorite breakfast. He records the results in this table.

Breakfast Survey

Breakfast	Number of Votes
Pancakes	18
Waffles	13
Muffins	11
Other	8

There are 720 students at Dustin's school. Based on the survey results, which is the **best** estimate of the number of students who prefer pancakes?

Sample Task #2 (Multiple Choice)

Joan is the community leader of a group of people who want to pave a gravel road through town.

Which method of sampling the population of the community would result in the **most** unbiased opinion on whether or not to pave the road?

Ⓐ Joan holds a community meeting open to the public on a Monday morning and polls those who attend.

Ⓑ Joan asks the opinion of neighbors she sees on the street while taking her evening walks.

Ⓒ Joan sends questionnaires with return envelopes to all homeowners in the community.

Ⓓ Joan sends e-mails to everyone on a community e-mail list.

Grade	*CCSS Domain*	*CCSS Strand*
7	**STATISTICS & PROBABILITY**	**Draw informal comparative inferences about two populations**

Sample Task #1 (Constructed Response)

Suppose that your classmates were debating about whether going to college is really worth it. Based on the following data of annual salaries (rounded to the nearest thousands of dollars) for college graduates and high school graduates with no college experience, does it appear that going to college is indeed worth the effort? The data are from people in their second year of employment.

College Grad	41	67	53	48	45	60	59	55	52	52	50	59	44	49	52
High School Grad	23	33	36	29	25	43	42	38	27	25	33	41	29	33	35

a. Calculate the difference between the sample mean salary for college graduates and for high school graduates.

b. On the same scale, draw dot plots of the two distributions, and discuss the variability in each distribution.

c. Is the variability about the same?

d. Based on your calculations, is going to college worth the effort?

Sample Task #2 (Multiple Choice)

Kent is the owner of an online company. He uses two different companies to ship packages to customers. He takes a sample of deliveries to determine which company delivers in the fewest number of days. The results are shown in these histograms.

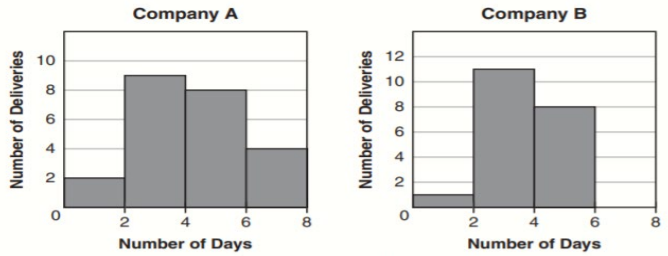

Based on the sample data, which statement about the two shipping companies is true?

Ⓐ Company A and Company B have the same range.
Ⓑ Company A and Company B have the same median.
Ⓒ Company A generally takes longer to deliver packages than Company B.
Ⓓ Company A had two deliveries that were faster than all of the deliveries for Company B.

Grade	*CCSS Domain*	*CCSS Strand*
7	**STATISTICS & PROBABILITY**	**Investigate chance processes and develop, use, and evaluate probability models.**

Sample Task #1 (Constructed Response)

This spinner is divided into 12 equal sections.

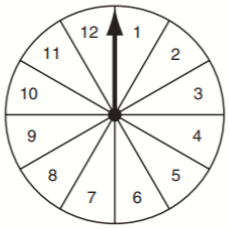

The arrow on the spinner is spun once. What is the probability, written as a decimal, that the arrow will stop on a number **greater** than 9?

Sample Task #2 (Multiple Choice)

. A bag contains 2 black marbles (B) and 1 white marble (W). Two marbles are taken from the bag at random, one at a time, without replacement. Which list represents the sample space for the possible outcomes?

Ⓐ WB

Ⓑ WB, BW

Ⓒ WB, BW, BB

Ⓓ WW, WB, BB

MLSS AND CLR GUIDE

- Use random sampling to draw inferences about a population.
- Draw informal comparative inferences about two populations.
- Investigate chance processes and develop, use, and evaluate probability models

CCSS Domain	*CCSS Cluster*
Statistics and Probability	**Use random sampling to draw inferences about a population**

Culturally and Linguistically Responsive Instruction

Relevance to Families and Communities	How can you create connections between the cultural and linguistic behaviors of your students' home culture and language, the culture and language of school mathematics to support students in creating mathematical identities as capable mathematicians that can use mathematics within school and society? For example, when studying the use of random sampling to draw inferences about a population the types of mathematical tasks are critical because students come to our classrooms with Informal Knowledge/Funds of Knowledge.	
Cross-Curricular Connections	**Science:** Examining biological characteristics of a sample **Social Studies:** Population Sampling and Data Analysis	
Validate/Affirm/Build /Bridge	• *How can you design your mathematics classroom to intentionally and purposefully legitimize the home culture and languages of students and reverse the negative stereotypes regarding the mathematical abilities of students of marginalized cultures and languages?* • *How can you create connections between the cultural and linguistic behaviors of your students' home culture and language, the culture and language of*	• Goal Setting: Setting challenging but attainable goals with students can communicate the belief and expectation that all students can engage with interesting and rigorous mathematical content and achieve in mathematics. Unfortunately, the reverse is also true, when students encounter low expectations through their interactions with adults and the media, they may see little reason to persist in mathematics, which can create a vicious cycle of low expectations and low achievement. For example, when studying the use of random sampling to draw inferences about a population, goal setting is critical because it provides students opportunities to use mathematics to understand and investigate meaningful situations.

	school mathematics to support students in creating mathematical identities as capable mathematicians that can use mathematics within school and society?	

Planning for Multi-Layered System of Supports

Vertical Alignment

Previous Learning	***Current Learning***	***Future Learning***
• In 6th grade, learners summarize quantitative data using quantitative measures of center and variability.	• In 7th grade, learners focus on the process of selecting a random sample, and the value of doing so.	• In high school, students make inferences and justify conclusions from sample surveys, experiments, and observational studies

Suggested Instructional Strategies

Pre-Teach

Level of Intensity	***Essential Question***	***Examples***
Targeted	*What pre-teaching will prepare students to productively struggle with the mathematics for this cluster within your HQIM?*	For example, some learners may benefit from targeted pre-teaching that introduces new representations when studying using random sampling to draw inferences about a population because the idea of a random sample is a new concept for students. They need time to understand what a random sample is and what it is not before they are expected to make inferences based on one.
Intensive	*What critical understandings will prepare students to access the mathematics for this cluster?*	*6.SP.A.1 This standard provides a foundation for work with using random sampling to draw inferences about a population because this standard is when students are introduced to a statistical question and the variability in data. If students have unfinished learning within this standard, based on assessment data, consider ways to provide intensive pre-teaching support prior to the start of the unit to ensure students are ready to access grade level instruction and assignments.*

Re-Teach		
Level of Intensity	***Essential Question***	***Examples***
Targeted	What formative assessment data (e.g., tasks, exit tickets, observations) will help identify content needing to be revisited during a unit?	Examine assessments for evidence of lingering misconceptions (see common misconceptions). If students exhibit one more of these misconceptions, consider addressing the misconception by re-engaging with content during a unit on using random sampling to draw inferences about a population by providing specific feedback to students on their work through a short mini lesson because students need to make sure that the random sample is in fact a random representation of a population before any inferences can be made about the population.
Intensive	What assessment data will help identify content needing to be revisited for intensive interventions?	Examine assessments for evidence of students still developing the underlying ideas as some students may benefit from intensive extra time during and after a unit using random sampling to draw inferences about a population by confronting student misconceptions because there is variability in estimations and predictions and how to gauge the difference. Also, the need for multiple random samples.

Extension	
Essential Question	***Examples***
What type of extension will offer additional challenges to 'broaden' your student's knowledge of the mathematics developed within your HQIM?	To extend students learning, some learners may benefit from an extension such as the opportunity to understand concepts more quickly and explore them in greater depth than other students when studying using random sampling to draw inferences about a population because the concept of random sampling and applying it to make inferences about a population is a large concept. Being able to provide extra time for students to explore the samples, and the variability will help students in other clusters.

CCSS Domain	*CCSS Cluster*
Statistics and Probability	**Draw informal comparative inferences about two populations**

Culturally and Linguistically Responsive Instruction

Relevance to Families and Communities	How can you create connections between the cultural and linguistic behaviors of your students' home culture and language, the culture and language of school mathematics to support students in creating mathematical identities as capable mathematicians that can use mathematics within school and society? During a unit focused on investigating chance processes and developing, using, and evaluating probability models, consider options for learning from your families and communities the cultural and linguistic ways this mathematics exists outside of school to create stronger home to school connections for students, for example, learning about the about how probability is connected to games that families enjoy playing. Discussing how probability makes the games more or less interesting.
Cross-Curricular Connections	**Science and Technology:** Science and math are intimately connected, particularly in fields such as chemistry, astronomy and physics. Students who cannot master basic arithmetic skills will struggle to read scientific charts and graphs. More complex math, such as geometry, algebra and calculus, can help students solve chemistry problems, understand the movements of the planets and analyze scientific studies. Math is also important in practical sciences, such as engineering and computer science. Students may have to solve equations when writing computer programs and figuring out algorithms. Nursing majors may have great bedside manner. but they also need to know how to precisely calculate dosages to pass their courses. **Social Studies**: Social studies classes, such as history, often require students to review charts and graphs that provide historical data or information on ethnic groups. In geography classes, students might need to understand how the elevation of an area affects its population or chart the extent to which different populations have different average life spans. Knowledge of basic mathematical terms and formulas makes statistical information accessible **Literature and Writing**: Literature might seem like a far cry from math but mastering basic arithmetic can enable students to better understand poetry. The meter of poetry, the number of words to include in a line and the effect that certain rhythms have on the reader are all products of mathematical calculations. At a more mundane level, math can help students plan reading assignments in literature classes by discerning their average reading time and estimating how long it will take them to read a particular work. The linear, logical thinking used in mathematical

	problems can also help students write more clearly and logically. **Art/Music:** Students interested in pursuing careers in theater, music, dance or art can benefit from basic mathematical knowledge. Musical rhythm often follows complex mathematical series, and math can help students learn the basic rhythms of dances used in ballet and theater performances. Art thrives on geometry, and students who understand basic geometric formulas can craft impressive art pieces. Photographers use math to calculate shutter speed, focal length, lighting angles and exposure time	
Validate/Affirm/Build /Bridge	• *How can you design your mathematics classroom to intentionally and purposefully legitimize the home culture and languages of students and reverse the negative stereotypes regarding the mathematical abilities of students of marginalized cultures and languages?* • *How can you create connections between the cultural and linguistic behaviors of your students' home culture and language, the culture and language of school mathematics to support students in creating mathematical identities as capable mathematicians that can use mathematics within school and society?*	• Building Procedural Fluency from Conceptual Understanding: Instruction should build from conceptual understanding to allow students opportunities to make meaning of mathematics before focusing on procedures. When new learning begins with procedures it privileges those with strong prior familiarity with school mathematics procedures for solving problems and does not allow learning to build for more methods for solving tasks that occur outside of school mathematics. For example, when studying drawing informal comparative inferences about two populations the types of mathematical tasks are critical because in this cluster of standards many of the ideas are new to students. We need to create learning opportunities that are focused on conceptual understanding as the entry point. We can build connections with students' cultures and languages as we purposefully work with students to use data that is relevant as they explore probability and develop models. This will also allow us to create opportunities for students to practice the situational appropriateness in the use of these mathematical principles in a variety of real-world situations.

Planning for Multi-Layered System of Supports

Vertical Alignment		
Previous Learning	***Current Learning***	***Future Learning***
• In 6th grade, learners develop an	• This is an additional cluster, so the	• In future courses, learners will

understanding of graphs, mean, median, mode, Mean Absolute Deviation (M.A.D.) and interquartile range (IQR). In 6th grade, learners recognize there will be variability in the data of a statistical question and will account for it in the answers. In 6th grade, learners understand a data set has a distribution which can be described by its center, spread, and overall shape and can summarize numerical data sets by reporting the number of observations along with describing the nature of the attribute under investigation and how it was measured and its units.	connections between this cluster and other grade level clusters is limited to 7.SP.A and 7.SP.C that examine different aspects of Statistics & Probability	represent data with plots on the real number line (dot plots, histograms, and box plots). In future courses, learners will use statistics appropriate to the shape and context of the data distribution to compare measures of center (median, mean) and spread (IQR, standard deviation) of two or more different data sets. In future courses, learners will interpret differences in shape, center, and spread in the context of the data sets, accounting for possible effects of extreme data points.

Suggested Instructional Strategies

Pre-Teach

Level of Intensity	***Essential Question***	***Examples***
Targeted	*What pre-teaching will prepare students to productively struggle with the mathematics for this cluster within your HQIM?*	For example, some learners may benefit from targeted pre-teaching that provides additional time for confusion to happen with new mathematical ideas when studying; Drawing informal comparative inferences about two populations because in previous clusters, students worked with one population
Intensive	*What critical understandings will prepare students to access the mathematics for this cluster?*	*7.SP.A.2: This standard provides a foundation for work with Drawing informal comparative inferences about two populations because why and how inferences and generalizations are made helps to justify reasoning. If students have unfinished learning within this standard, based on assessment data, consider ways to provide intensive pre-teaching support prior to the start of the unit to ensure students are ready to access grade level instruction and assignments.*

Re-Teach

Level of Intensity	***Essential Question***	***Examples***
Targeted	What formative assessment data (e.g., tasks, exit tickets, observations) will help identify content needing to be revisited during a unit?	Examine assessments for evidence of lingering misconceptions (see common misconceptions). If students exhibit one more of these misconceptions, consider addressing the misconception by re-engaging with content during a unit on drawing informal comparative inferences about two populations by clarifying mathematical ideas and/or concepts through a short mini-lesson because students may not understand why it may be necessary to conduct multiple samples of the same size
Intensive	What assessment data will help identify content needing to be revisited for intensive interventions?	Examine assessments for evidence of students still developing the underlying ideas drawing informal comparative inferences about two populations by offering opportunities to understand and explore different strategies because students can organize by using lists, tables, tree diagrams, and simulations.

Extension

Essential Question	***Examples***
What type of extension will offer additional challenges to 'broaden' your student's knowledge of the mathematics developed within your HQIM?	To extend students learning about an opportunity to explore links between various topics when studying drawing informal comparative inferences about two populations because students can apply probabilities to real-life scenarios that link science disciplines for example, genetics and a Punnett square.

CCSS Domain	*CCSS Cluster*
Statistics and Probability	**Investigate chance processes and develop, use, and evaluate probability models**

Culturally and Linguistically Responsive Instruction

Relevance to Families and Communities	How can you create connections between the cultural and linguistic behaviors of your students' home culture and language, the culture and language of school mathematics to support students in creating mathematical identities as capable mathematicians that can use mathematics within school and society? During a unit focused on Investigating chance processes and developing, using, and evaluating probability models, consider options for learning from your families and communities the cultural and linguistic ways this mathematics exists outside of school to create stronger home to school connections for students, for example, learning how to interpret probability or design models can be used in their daily life and connecting these examples to the work within the classroom.	
Cross-Curricular Connections	**Science:** Make an argument on growth and development of organisms: animal reproductions, plant reproduction for specialized features. MS-LS1-4 • Develop a model and identify components. Describe relationships between components. Model data they create. Identify limitations of models. Describe how the data they generate can be used to create designs through testing and modification. Engineering Design Process. MS-ETS1-4 • Model genetic information and sexual reproduction results. Punnett squares. MS-LS3-2 Scatterplots of temperatures of water vs mass of ice added MS-PS3 • Model genetic information and sexual reproduction results. Punnett squares. MS-LS3-2 Use simulations to generate data that can be used to modify a proposed object, tool, or process MS-ETS1	
Validate/Affirm/Build /Bridge	• *How can you design your mathematics classroom to intentionally and purposefully legitimize the home culture and languages of students and reverse the negative stereotypes regarding the mathematical abilities of students of marginalized cultures and languages?* • *How can you create connections between the cultural and linguistic*	• Building Procedural Fluency from Conceptual Understanding: Instruction should build from conceptual understanding to allow students opportunities to make meaning of mathematics before focusing on procedures. When new learning begins with procedures it privileges those with strong prior familiarity with school mathematics procedures for solving problems and does not allow learning to build for more methods for solving tasks that occur outside of school mathematics. For example, when studying Investigating chance processes and developing, using, and evaluating probability models, the types of mathematical tasks are critical because probability models are encountered in everyday life, especially seen in news reporting or studies that

	behaviors of your students' home culture and language, the culture and language of school mathematics to support students in creating mathematical identities as capable mathematicians that can use mathematics within school and society?	students might see. With a little building of procedural fluency from conceptual understanding, students can understand probability meanings and interpret meanings on their own.

Planning for Multi-Layered System of Supports

Vertical Alignment

Previous Learning	***Current Learning***	***Future Learning***
• The 6.SP standards connect directly to this standard. In 6th grade, students approximated the probability of a chance event by collecting data on the chance process that produces it and observing its long-run relative frequency, and predict the approximate relative frequency given the probability. Students also used ratio and rate reasoning to solve real-world and mathematical problems	• In 7th grade, students will recognize and represent proportional relationships between quantities. In 7th grade, students also use proportional relationships to solve multistep ratio and percent problems. These skills continue	• In 8th grade, learners construct and interpret a two-way table summarizing data on two categorical variables collected from the same subject. In high school, learners recognize the purposes of and differences among sample surveys, experiments, and observational studies; explain how randomization relates to each. In high school, learners find the conditional probability of A given B as the fraction of B's outcomes that also belong to A, and interpret the answer in terms of the model.

Suggested Instructional Strategies

Pre-Teach

Level of Intensity	***Essential Question***	***Examples***
Targeted	*What pre-teaching will prepare students to*	For example, some learners may benefit from targeted pre-teaching that provides additional time for confusion

	productively struggle with the mathematics for this cluster within your HQIM?	to happen with new mathematical ideas when studying; Investigate chance processes and develop, use, and evaluate probability models because the probability model is first introduced in this grade level and students may get confused more easily.
Intensive	*What critical understandings will prepare students to access the mathematics for this cluster?*	*6.RP.A.3: This standard provides a foundation for work with investigating chance processes and develop, use, and evaluating probability models because understanding ratio concepts and using ration reasoning to solve problems will help in solving probability models. If students have unfinished learning within this standard, based on assessment data, consider ways to provide intensive pre-teaching support prior to the start of the unit to ensure students are ready to access grade level instruction and assignments*

Re-Teach		
Level of Intensity	***Essential Question***	***Examples***
Targeted	What formative assessment data (e.g., tasks, exit tickets, observations) will help identify content needing to be revisited during a unit?	Examine assessments for evidence of lingering misconceptions (see common misconceptions). If students exhibit one more of these misconceptions, consider addressing the misconception by re-engaging with content during a unit on investigation of chance processes and developing, using, and evaluating probability models by clarifying mathematical ideas and/or concepts through a short mini lesson because the probability model is first introduced in this grade level and students may need time to clarify the concept
Intensive	What assessment data will help identify content needing to be revisited for intensive interventions?	Examine assessments for evidence of students still developing the underlying ideas as some students may benefit from intensive extra time during and after a unit on investigation of chance processes and developing, using, and evaluating probability models by offering opportunities to understand and explore different strategies because students can find probabilities by using organized lists, tables, tree diagrams, and simulations

Extension	
Essential Question	***Examples***

What type of extension will offer additional challenges to 'broaden' your student's knowledge of the mathematics developed within your HQIM?	To extend students learning: For example, some learners may benefit from an extension such as the opportunity to explore links between various topics when studying investigation of chance processes and developing, using, and evaluating probability models because students can apply probabilities to real-life scenarios that link science disciplines for example, genetics and a Punnett square.